JUNG PUMPEN COMPLI

10[illegible]/2	10[illegible]/2	120/2		
300				
400	400			
[illegible]0[illegible]/2	[illegible]0[illegible]/2	[illegible]20/2		
[illegible]10/4	[illegible]1[illegible]/4	[illegible]2[illegible]/4	[illegible]2[illegible]/2	[illegible]3[illegible]/2
100[illegible]/2	100[illegible]/2	1020/2	1010/4	
1010/4	101[illegible]/4	102[illegible]/4	102[illegible]/2	103[illegible]/2
1210/4	121[illegible]/4	122[illegible]/4	122[illegible]/2	123[illegible]/2

DE O igi.¼a -Be. ieb a.¼ ei. .¼g

EN I.¼ . c.i¼.¼ Ma.¼ a

FR I.¼ . c.i¼.¼ de e.[illegible]ice

IT I . i¼.¼i[illegible]e ´ .¼

NL Geb ik ha.¼d eidi.¼g

PL I.¼ . kcja ek [illegible] .¼a.acji

CZ N.[illegible]¼d[illegible] .¼[illegible] .¼[illegible]¼

SK N.[illegible]¼d .¼a[illegible] e[illegible] d k

HU [illegible] e e.e. i . .a.

RO Ma.¼ a de .i i a e

ZH

EINSATZ

Die ecke fe ige F ka ie hebea age c i id LGA Ba a ge f id eig e ich Hebe Ab e a T i e - e - id U i a a age i ie h i- che Sch a e i de b iche Bei- e g ge.

Die Beh e i d be f ba i ei e a . H he 2 WS d ei e Da e g - e 7 Tage.

Die S e e g i ich be f ba , abe i a e ge ch ach IP 44.

Bei ch if ige l a a i id be i g ge e Ei a e f die S e e g die Sch a f de ge de EMC-Rich i ie 2014/30/EU d i f de Ei a i h iche Be eich a ffe i- iche S e g g e geeig e . Bei A ch a ei l d ie i e i e ha b ei e l d iebe iebe i ei e S e g a eige e H ch a id g - a f a i . U. i e iche de S fe igkei ech e .

Bei Ei a de A age e die je ei- ige a i a e Ge e e, V ch if e e ie die iche Be i ge ei geha e e de , ie .B.

- Ab a e hebea age f die Geb de- d G d ck e e g (.B. i E a EN 12050 d 12056)
- E ich e e Niede a g a age (.B. i De ch a d VDE 0100)
- Siche hei d A bei i e (.B. i De ch a d Be SichV d BGR 500)
- Siche hei i ab a e ech i che A a- ge (.B. i De ch a d GUV-V C5, GUV- R 104, GUV-R 126)
- E ek i che A age d Be (.B. i De ch a d GUV-V A3)
- E e i i ch EN 60079-0, EN 60079- 1, EN 60079-14, EN 60079-17 d EN 1127-1

Lieferumfang

- Beh e i P e( ) d K e - f a ch f de Z a f
- Red ie ck DN 150 / DN 100 f c i 500 d 1000
- be chieb ffe f die L f g (c i 1200 e a i che Ve bi d g i Sche - e)
- A ch f a ch f die D ck ei g e a i che Ve bi d g i Sche e f die D ck ei g
- S eckdich g(e) f die Ha d e b a- e e de ei e e Z a f DN 50
- Befe ig g a e ia f de Beh e
- R ck ch agk a e e f die D ck ei g (c i 300, 500, 1000 d 1200)
- S e e g (ich c i 300)

Betriebsart: Aussetzbetrieb S3, siehe techn. Daten

EINBAU

Die Hebea age a f ieb iche d f ei ehe d ei geba e de . Nebe d be a e bedie e de d a e de Tei e A bei a i de e e 60 c B ei e b . H he ha de ei .

L f g: Die L f g ei g be Dach gef h e de .

Z a f: I Z a f de Beh e ei Sch a e chiebe a ge d d e - de .

D ck ei g: Hi e de R ck ch agk a- e i de D ck ei g ei ei e e Sch a e chiebe a ge d d e - de . I die R ck ch agk a e e ich i Lie- fe fa g de A age e ha e , hie ei EN-ge f e R ckf e hi de e ei- geba e de .

Die D ck ei g i ei e Sch eife be die iche R ck a ebe e gef h e de .

F die E e g de A f e g a - e i ei P e f e he .

ACHTUNG! A e Sch a be , die Befe i- g g Ei e ei e a Beh e die e , d fe i e a . D eh e e 6 N a ge ge e de .

Montage Behälter

De Schiebe i Z a f (Z beh) ch ie e , Wa e ei i h e d de M age he hi de .

compli 300. De ge c ch e Z a f DN 100, ei ich de be i ei e L ch - ge 102 de ei e S ich ge a de Ma kie- g ff e d e g a e . De bei iege de K e f a ch i de Sech ka h a be a Z a f cke befe ige .

Die Wi ke Ve a ke de A age a de Beh e ch a be d da die A age i de K e f a ch bi A ch ag a f da Z a f h chiebe .

Da die Ma kie ge f die B de d be a eich e d b h e d de D be ei- e e .

Je ka de K e f a ch fe ge ge e de d die A age i de H ch a - be d Scheibe a B de he a ke e - de .

Alle anderen compli. Hebea age i de K e f a ch bi A ch ag a f da Z - a f h chiebe d a ich e .

S ei ei iche Z a f DN 150 ge e de , e e i ei e L ch- ge 152 a de Ma kie g ge ff e d e g a e e de . De S a da d a f da i de Ve ch e (Z beh) he - ch e d da Ei cha ea e fe ge eg e de .

Hinweis. Bei de c i 500 d 1000 ka de Z a f DN 150 a f DN 100 he i ge e de , e da bei iege de Red ie ck e i de K e f a ch ei ge e i d.

Die Sech ka h a be de K e f a- che fe a iehe .

L che f die B de befe ig g de Beh - e a eich e d b h e .

H ch a be i Scheibe d D be - a e d ch die Beh e b h g ecke d fe ch a be .

ACHTUNG! Die Sch a be e fe ie- he , da ich de Beh e ich he f , be eh die Gefah ei e U dich igkei .

Bei de A age de Ba eihe c i 1200 i d de Beh e ich ch i ei iche Wi ke befe ig .

Montage Lüftung

Die L f g ei g i de be chieb f- fe DN 70 ech he a Beh e a ch ie e d be Dach f h e .

Bei de c i 1200 de be e ech e S e 78 a de Ma kie g ab- ch eide d e g a e . Je die L f g - ei g i de e a i che Ve bi d g DN 70 a ch ie e d be Dach f h e .

Montage Druckleitung

A f de Abga g f a ch i ie e :

1. R ck ch agk a e e (e ich Liefe - fa g)
2. Ab e chiebe (Z beh)
3. A ch f a ch d
4. i e a i che Ve bi d g die D ck ei- g a ch ie e d i ei e Sch eife be die iche R ck a ebe e f h e .

Anschluss DN 50 vertikel zur Notentsorgung

Die e A ch i d A ch ei e Ha d e b a e e ge .

De S e a de Ma kie g i ei e L ch ge ff e d e g a e .

Die S eckdich g 58/50 ei e e .

Z a f h i A e - 50 d ch die S eckdich g i de Beh e chiebe . De Ab a d Beh e b de e 50 be age .

Die Ha d e b a e g g ich a de Wa d befe ige , i de ei ge ch be- e R h he bi de d da die D ck ei- g de Ha d e b a e e ge . A ch hie die D ck ei g i ei e Sch eife be die iche R ck a ebe e ge- f h e de .

Zusatzzulauf DN 50 horizontal

Die he gefe ig e N f de iche Z a f i ei e L chk ei ge ff e d die e g a e .

Die S eckdich g 58/50 ei e e .

Z a f h i A e - 50 d ch die S eckdich g i de Beh e chiebe .

ACHTUNG! Die A ch ei ge a de ied ige ei iche Z fe de c i

300 i.4d ; g ich ; .4ahe a.4 de A.4 age i; ei.4e 4ge.4a.4.4; e.4 A.4 ; a b4ge.4 ; e- he.4. Die e B4ge.4 i.4de ; e.4 ei.4e H; he; 4.4 180 i che.4 R4h 4h e .4d A f ; e ebe.4e habe.4. D ch L f; 4 ; e i.4 de A.4 ch ei; .4g ka.4.4 e Ab a 4 b e e.4 .4d R; ck ; a k4 e.4. U die e.4 R; ck ; a ; e eide.4, i ; die Z a f ei; .4g i.4 ih e H4ch 4k; e.4; ; f; e.4. Die L; f- ; .4g ei; .4g ka.4.4 a.4 die Beh; ; e ; f; .4g a.4ge ch 4 e.4 e de.4.

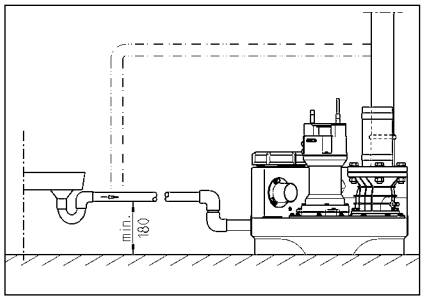

ELEKTRO-ANSCHLUSS

N ei.4e E ek; .4fachk af; da f a.4 P e, S ecke .4de S e e .4g E ek; .4a bei e.4; .4 .4eh e.4.

V.4 jede A bei de.4 Ne; ; ecke de A.4 age iehe.4 .4d iche ; e.4, da die A.4 age; .4.4 a.4de e.4 Pe .4- e.4 .4ich; iede .4; e S a.4.4 .4g ge e; ; e- de.4 ka.4.4.

ACHTUNG! Ne; ; ecke .4ie a i.4 Wa e ege.4! E; .4; e.4 e ei.4d i.4ge.4de Wa e ka.4.4 S; .4ge.4 .4d Sch; de.4 f; h e.4.

Die je ei g; ; ige.4 N.4 e.4 (.B. EN), a.4- de e ifi che.4 V.4 ch if; e.4 (.B. VDE) .4 ie die V.4 ch if; e.4 de ; ; iche.4 Ve .4 - g .4g .4e; be; eibe i.4d beach; e.4.

Be; ieb a.4.4 .4g beach; e.4 (iehe T e.4- chi d)!

Die A.4 age.4 be i; e.4 ei.4e Ni; ea cha; .4g, die die P e, abh; .4gig; .4 Wa e ; a.4d, ei.4- b . ab cha; e; . De Pie; .4.4 de ei.4ge- ba ; e.4 A a a.4 age ig.4a i ie ; , da ei.4e F .4k; i.4.4 ; .4g; .4 ieg; , a ch e.4.4 die .4 ; .4 ; be gehe.4d i ; .

I ; die P e a ge .4 de.4, i d ie d ch de.4 Wick .4g ; he .4 ; a; e.4 abge- cha; e; . V.4 de Be; ige.4 de S; .4g - ache de Ne; ; ecke ge .4ge.4 e - de.4, da die P e .4.4 ; .4ach de Abk; h e.4 e b; ; ig iede ei.4 cha; e; . Ei.4e di ek; e S; e d .4g e f.4 g; .4ich; .

Anlagen in Wechselstrom

Die A.4 age da f.4 a.4 ei.4e; .4 ch if; ; ig i.4 ; a ie ; e S eckd.4 e a.4ge ch 4 e.4 e - de.4, die ich i.4 ei.4e ; .4cke.4e.4 Ra .4be - ha b de R; ck ; a ebe.4e befi.4de; .4d i; 16 A (; ge) abge iche ; i ; .

Anlagen in Drehstrom

F; de.4 E ek; .4a.4 ch de Hebea.4 age i ; ei.4e; .4 ch if; ; ig i.4 ; a ie ; e 5- 4- ige CEE-S eckd.4 e; .4 ehe.4, die ich i.4 ei.4e ; .4cke.4e.4 Ra .4be ha b de R; ck- ; a ebe.4e befi.4de; (3/N/PE 230/400 V).

ACHTUNG! A V.4 iche .4ge.4 f; die A.4 a- ge i.4d.4 ; ge Siche .4ge.4 .4de A ; .4 a- ; e.4 i; C-Cha ak; e i ; ik ei.4 e; e.4.

Montage der Steuerung (nicht compli 300)

Die S e e .4g .4 i.4 ; .4cke.4e.4 R e.4 .4be ha b de R; ck ; a ebe.4e be; eibe.4 .4d da Geh; e ; e; ge ch 4 e.4 ha ; e.4. Die S e e .4g g ; g; .4g ich ei.4, da i; ei.4e K.4.4; 4 e jede ei; ; g ich i ; . H.4he L f; fe ch igkei; .4d Sch i; a e ka.4.4 die S e e .4g e ; e.4.

Schaltniveaus

Die Ei.4- .4d A cha; .4k; e i.4d ab We k f; die S a.4da d a fh; he de je ei ige.4 A.4 age ei.4ge ; e ; .

S.4 ; e.4 Sie ei.4e a.4de e Z a fh; he ; h e.4, .4 ; e.4 Sie de.4 Ei.4 cha; .4k; .4e de- fi.4ie e.4 (.4ich; c.4 e i 300), da e .4.4 ; e; . ei.4e R; ck ; a i Z a f k4 e.4 ka.4.4.

Die a.4de e.4 Scha; .4k; e f; A a (+ 2 c) .4d bei D.4 e a.4 age.4 S; i; e.4 a ; (+4 c) e de.4; .4.4 de S e e .4g da.4.4 a ; .4 a; i ch e.4; e che.4d .4e ge e ; .

Einschaltniveau neu festlegen (nicht compli 300)

Die A.4 age; .4 ; be gehe.4d ; i e; e.4, Ha.4d- 0-A ; .4 a; ik-Scha ; e a f "0" e; e.4. Da J ; ie e.4 de Ei.4 cha; .4k; e e f.4 g; i M.4d "A.4a .4ga e ; e K1" ech; ei; ich i.4 de S e e .4g. E; fe .4e.4 Sie; .4 ; be- he.4d die K a ich; abdeck .4g de M.4d .

A f de A.4a .4ga e ; e befi.4de.4 ich d ei Le ch; di.4de.4, die i; P1 - P2 - P3 be eich- .4e; i.4d.

- P1 = Diag.4.4 ef .4k; i.4.4,
- P2 e ch; e; = Wa e ; a.4d ieg; ; be A cha; ; .4; ea abe .4.4ch .4; e Ei.4- cha; .4; ea
- P3 e ch; e; = Wa e ; a.4d ha; Ei.4- cha; .4; ea e eich;

F; e.4 Sie de.4 Sa e beh; ; e bi U.4- ; e ka.4; e de Z a f i; Wa e . E da f.4 P2 e ch; e.4, e.4.4 a ch P3 e ch; e; , .4achge ege; e de.4:

D ehe.4 Sie die k ei.4e S e ch a be .4; e- ha b; .4.4 P1 ei.4 bi ei U d eh .4ge.4 i Uh eige i.4.4. Je; ; de.4 Sch i e i Beh; ; e .4; e de.4 A cha; .4k; ; a che.4 .4d iede a f ch i e.4 a e.4. Le ch; e; P3 i e .4.4ch, d ehe.4 Sie die S e ch a be ei.4e ei; e e U d eh .4g i Uh eige i.4.4 .4d; a che.4 de.4 Sch i e e .4e ; .4; e .

Die e.4 V.4 ga.4g 4 a.4ge iede h.4 e.4 bi P3 .4ich; eh e ch; e; , da.4.4 d ehe.4 Sie die S e ch a be; .4 ich; ig i Gege.4 h ei- ge i.4.4 ; ck, bi P3 ge ade iede e ch- ; e; . De Ei.4 cha; .4k; i ; ge e; ; .

Alarmanlage

S; .4g e d .4ge.4 e f.4 ge.4 .4 .4h .4 i ch a a ch ak ; i ch. Die e ie.4 ; ig .4e; ab- h; .4gige A a a.4 age e de; M.4; .4 ; .4- ge.4 de P e (.4; e LED, .4ich; bei AD 00 .4d c.4 e i 300). G eich ei; ig e ; .4; ei.4 i.4; e- g ie ; e ak ; i che A a . Die ak ; i che Sig.4a ; ; ich .4 d ch S; .4g be ei; i- g .4g .4de ge.4e e ab ; e e.4.

L; ; de M.4.4; age.4 ; kei.4e ak ; i che K.4.4; .4 e de S; e d .4g , .4 ka.4.4 da A a ig.4a ; be de.4 e.4; e.4; ia f eie.4 K.4.4- ; ak; (K e e.4 40 .4d 41) a f de P a; i.4e (c.4 e i 300 i S ecke) ei; e ge f; h ; e - de.4. De Sch ie e k.4.4; ak; de Sa e ; - .4g i ; a . i; 5A / 250V AC be a ; ba . De K.4.4; ak; ; ff.4e; .4ach S; .4g be ei; ig .4g.

Akku für Alarmanlage (nicht compli 300)

Die A a ei.4 ich; .4g i ; e ie.4 ; ig .4e; - abh; .4gig d.h. i Fa e ei.4e S; .4 a fa ka.4.4 kei.4 H.4ch a e a a a ge; ; e - de.4. U die A a a.4 age a ch bei S; .4 - a fa f .4k; i.4.4 f; hig ha ; e.4, ei.4 Akk ei.4ge e; ; e de.4. K a ich; ; ; ff.4e.4. Akk a A.4 ch c e a.4 ch ie e.4 .4d a ; .4 ge ehe.4e.4 P a; a f de P a; i.4e i; de ; .4 ha.4de.4e.4 Kabe bi.4de befe ; ige.4. Die e ka.4.4 die A a a.4 age bei Da e a a f; ca. 1 S; .4de i; S; .4 ; .4e .4 ge.4.

Nach Ne; e a.4.4 .4g iede keh i d de Akk a ; .4 a; i ch iede a fge ade.4. Ei.4 e.4; ade.4e Akk i ; i.4.4e ha b; .4.4 ca. 24 S; .4de.4 be; ieb be ei; , V.4 ad .4g i ; .4ach ca. 100 S; .4de.4 e eich; .

F .4k; i.4.4 f; higkei; de Akk ege ; ig e; fe.4! Da die Ne; e a.4.4 .4g ab cha ; e.4 .4d ei.4e H.4ch a e e d .4g a ; e.4. Die La ; ; ke de ak ; i che.4 A a da f ich ; be eh e e Mi.4 ; e.4 .4ich; e e.4; ich; e - i.4ge .4. Die Lebe.4 da e ieg; bei ca. 5 Jah- e.4. Ei.4 e; da; a f de Akk .4.4; ie e.4 .4d .4ach 5 Jah e.4; .4 g ich a ech e.4.

N 9V-Akk; e e.4de.4! Bei Ve - e.4d .4g; .4.4 T .4cke.4ba ; e ie.4 be- ; eh; E 4 i.4.4 gefah !

Betriebsstundenzähler

O i.4.4a ka.4.4 ei.4 Be; ieb ; .4de.4 ; h e i.4 die S e e .4g ei.4ge e; ; e de.4 (.4ich; c.4 - i 300). Hie die A.4 ch; e de Be; ieb - ; .4de.4 ; h e a f ca. 8 k; e.4 .4d a f de P a; i.4e a P a; BSZ i.4 die 4 B ch e.4 ; ecke.4. Fa .4ach de e .4e ; e.4 Ei.4 cha - ; e.4 de A.4 age kei.4e A.4 eige e f.4 g; , de Be; ieb ; .4de.4 ; h e 180 ; ged eh; e de.4.

Externer Alarmsummer (Zubehör)

K a ich ¿ de S e e g ff e.

A de K e e "S+" d "S-" ka a ei i a e ak i che , a e ak i che 12 VDC-Sig a gebe i ei e S a f ah e a . 30 A a ge ch e de. De i e e A a e ka ah ei e ei- de a ge cha e ei.

Bei de c v i 300 ka a ei e abh i ge A a a Z beh a ie e de, ei M a age cke i a Beh e a ha de.

Bei Doppelanlagen: Externe Blitz- oder Warnleuchte (Zubehör)

230V Le ch e (a .1A) a K e e N d 41 a ch ie e.

I ie e D ah b ¿ cke a K e e U ach 40 ege. De S a k ei i d ch F1 abge- iche .

Die S eckb ¿ cke "BRX2" ie f g ei e e: B i e ch e: abge ge (=) Wa e ch e: a fge eck (_ _ _).

Handbetrieb

De W cha e i die S e g "Ha d" b i ge. Die P e a bei e a abh i- gig a Ab a e ea i Da e be ieb. Da Ab e e a e de ha b d ch die Rei- ig g ff g be bach e e de.

Stillsetzen

W cha e i die S e g "0" b i ge, die P e i a i ge e . Die A a a age i e i e be ieb be ei .

F Re a a - d Wa g a - bei e a S e e g de P e ich die S e g "0" be e, de i e Ne ecke a de S eck- d e iehe.

Inspektion

Z E ha g de Be ieb iche hei i a ich ei e Sich k a e de A age ei ch ie ich de R h e bi d ge a - ehe.

Abge e La f de k a e cha fe Ka e e habe.

5. k a e, e f de iche fa achf - e de ech e (e a ka e a - ha de).
6. I a e ei ig g de Beh e (bei Beda f b . ach e ie e E f de i e) .B. Fe e fe e.
7. P ¿ fe de Z a de de Sa e beh - e .
8. A e 2 Jah e D ch ¿ e de A age i Wa e .
9. P ¿ fe de e ek i che Tei de A age. Die S e e g e b i a g f ei, e a e di g ei Akk ei geba e ei, i e ege ig a f F k i t - higkei k e ie e. Da bei a- g e A age de Sch i e i Beh e a hebe, bi ei H ch a e - a a e . A e de i de Sch i - e fa e f de ich ei ige.

Nach E edig g de Wa g a bei e i die A age ach D ch h g ei e P be- a fe ie24 BDC BT /C E EMC ID 915 MCIDC ( )T EM

BETRIEB

Probelauf und Funktionsprüfung

1. Rei ig g decke a Beh e ff e.
2. Schiebe i Z a f- d D ck ei g ff- e.
3. A age a S a g ege, D ehfe d ich- g a ei ge beach e.
4. Beh e bi Ei cha ea f e.
5. P e cha e je e ei d e ee de Beh e . P e ga g d ch die Rei i- g g ff g be bach e.
6. Sch i e de N ea -Scha g Ha d a g a be de Ei cha a k hi a a hebe, bi die A a a age a .
7. Rei ig g ff g iede i Decke d Dich g e ch ie e.
8. A ha d eh e e Scha a ie e die Dich igkei de Beh e , de A a e d de R h ei ge a ¿ fe.

Automatikbetrieb

De A a a ikbe ieb i de a e A a- ge be ieb. Hie de W cha e i die S e g "A a a ik" geb ach e de. D ch die i eg ie e N ea cha g i d die P e e a e che d de F ¿ igkei - a d i Beh e ei- d a ge cha e. De Be ieb de P e (bei c v i 300 Be- ieb be ei cha f) i d d ch ei e g ¿ e Le ch di de a ge ei .

ACHTUNG! Bei a ah ei e g e Z - f e ge (.B. P e e a g) i de Schiebe i Z a f ei d e , da die Hebea age a ch ei e hi i a e Scha be ieb a bei e (kei Da e a f, be eh ¿ be hi g gefah de P e-).

WARTUNG

Wi e feh e die Wa g ach EN 12056-4 e.

U ei e da e haf e Be ieb iche hei Ih e A age ge h ei e, e feh e i ei- e Wa g e ag ab ch ie e.

Die Wa g de F ka ie hebea - age d Ma ah e l a d- ha g i d Fachk dige i Ab d e 3 M a e i Ge e bebe ie- be, 6 M a e i Meh fa i ie h e de 12 M a e i Ei fa i ie h e d ch f h e.

V jede A bei de Ne ecke de A age iehe d iche e, da die A age a de e Pe - e ich iede e S a g ge e e - de ka .

S ecke d G i ch a ch ei- g a f echa i che d che i- che Be ch dig g ¿ fe. Be- ch dig e de gek ick e Lei ge ¿ e e e e de.

Wi e feh e bei de Wa g f ge de A - bei e e d eh e:

1. P ¿ fe de Ve bi d g e e a f Dich- igkei d ch Ab che de U fe de A age d A a e.
2. Be ige de Schiebe ; P ¿ fe a f eich- e Ga g, gegebe e fa ach e e d ei fe e.
3. k f e d Rei ige de R ¿ ckf e hi de e ; K e e Si d K ge (K a e).
4. Rei ige de P e d de i e ba a ge ch e e e Lei g be eich ; P ¿ - fe de La f ade d de Lage g.

k a e 22 bi 46 ﻟﻟﻟ

Qualification and training of personnel

SAFETY INSTRUCTIONS

ATTENTION!

AREAS OF APPLICATION

The ead ¸4 c44.4ec¸ c4 •/ i e age if¸i4g ¸a¸i44 a e LGA ce¸ified a4d a e i¸ab e f4 ¸he di•/4 a 4f a¸e a¸e f 4 ¸4i e¸ a4d i4a , a4d d4 e¸ic a¸e a¸e c44¸ai4i4g ¸he a i •/ i¸ie .

The ¸a4k ca4 i¸h ¸a4d b e i44 ¸4 a de•/¸h 4f 44¸ 4 e¸ha4 2 4f a¸e a4d a b e i44•/e i4d 4f •/¸4 7 da .

The c44¸ 4 4i¸ ca44¸ i¸h ¸a4d b e - i44, b ¸ i •/ a h•/ 44f i4 acc4 da4ce i¸h IP 44.

If i4 ¸a ed i4 c4 •/ ia4ce i¸h ¸he eg a- ¸i44 a4d ed•/ 4•/e , ¸he4 ¸hi c44¸ 4 4i¸ ee¸ ¸he•/ 4¸ec¸i⬇e e¸ i e e4¸ 4f ¸he EMC Di ec¸i⬇e 2014/30/EU a4d i i¸- ab e f4 d4 e¸ic e a4d c44.4ec¸i44 ¸4 a •/4 e •/•/ f 4 ¸he g id. Whe4 c44.4ec¸ed ¸4 a4 i4d ¸ ia ai4 i¸hi4 a4 i4d ¸ ia 4•/e a¸i44 i¸h •/4 e •/•/ •/ 4⬇ided b a c4 •/a4 -4 4 high⬇4¸age¸ a4 f4 e , i4- fficie4¸ i 4i¸ ¸4 i4¸e fe e4ce ha ¸4 be e•/ec¸ed.

Whe4 i4g¸he•/ •/ ,¸he e e⬇a4¸ 4a¸ i44a a , eg a¸i44 a4d ¸•/ a¸i44 ¸ be adhe ed¸4, f4 e a •/ e:

- Se age di•/4 a 4i¸ f4 b i di4g a4d g 4 4d d ai4age ¸e (e.g. EN 12050 a4d 12056 i4 E 4•/e)
- I4 ¸a a¸i44 4f 4 ⬇4¸age ¸e (e.g. VDE 0100 i4 Ge a4)
- Safe¸ a4d 4 ki4g a¸e ia (e.g., Be- ¸ SichV a4d BGR 500 i4 Ge a4)
- Safe¸ i4 a ¸e a¸e ¸e (e.g., GUV- V C5, GUV-R 104 a4d GUV-R 126 i4 Ge - a4)
- E ec¸ ica ¸e a4d 4•/e a¸i4g e 4 c- e (e.g., GUV-V A3 i4 Ge a4)
- E •/ 4 i44 •/ 4¸ec¸i44 EN 60079-0, EN 60079-1, EN 60079-14, EN 60079-17 a4d EN 1127-1

Scope of supply

- Ta4k i¸h •/ •/( ) a4d c a •/ f a4ge f4 i4 e¸
- Red ce DN 150 / DN 100 f4 c4 •/ i 500 a4d 1000
- S •/-44 4ke¸ •/•/e f4 ⬇e4¸i a¸i44 •/•/e (c4 •/ i 1200 f e ib e c44.4ec¸i44 i¸h h4 e c a •/)
- C44.4ec¸i44 f a4ge f4 •/ e e•/•/e
- F e ib e c44.4ec¸i44 i¸h h4 e c a •/ f4 ¸he•/ e e•/•/e
- P g-i4 ea ( ) f4 ¸he dia•/h ag ha4d •/ •/ 4 addi¸i44a DN 50 i4 e¸
- Fi i4g a¸e ia f4 ¸a4k
- N44- e¸ 4 ⬇a⬇e f4 ¸he •/ e e •/•/e (c4 •/ i 300, 500, 1000 a4d 1200)
- C44¸ 4 (44¸ c4 •/ i 300)

Mode of operation: intermittent operation

[illegible] back- [illegible] [illegible] [illegible] [illegible] be [illegible] ed [illegible] [illegible] highe [illegible] [illegible]. The [illegible] [illegible] [illegible] [illegible] ca [illegible] be c[illegible] [illegible] [illegible] [

[illegible] the cable [illegible] of c[illegible] [illegible] i 300, a[illegible] ai[illegible] -i[illegible]de[illegible]e[illegible]-de[illegible] a a de[illegible]ice ca[illegible] be fi[illegible]ed a[illegible] a[illegible] acce - [illegible]. The e i a [illegible] [illegible]i[illegible]g ba e [illegible] [illegible]he [illegible]a[illegible]k f[illegible] [illegible]hi [illegible] [illegible] e.

In the case of duplex units: External 230V~ flashing light or warning light (accessory)

C[illegible]ec[illegible] a 230V a [illegible] (1 A a .) [illegible] e i[illegible]a N a[illegible]d 41.

La a[illegible] i[illegible] a[illegible]ed i e b idge f[illegible] [illegible]e i[illegible]a U [illegible] e i[illegible]a 40. The e ec[illegible] ic ci c i[illegible] i [illegible] [illegible]ec[illegible]ed b F1.

Se[illegible] J [illegible]e BRX2 a f[illegible] [illegible] :
F a hi[illegible]g igh[illegible] i[illegible]h [illegible] BRX2
(C[illegible] i[illegible] [illegible] ===)
Wa [illegible]i[illegible]g igh[illegible] i h BRX2
(F a hi[illegible]g ([illegible] [illegible] _)

OPERATION

Test run and functional check

1. O[illegible]e[illegible] he a[illegible] e[illegible]a[illegible]ce c[illegible]e [illegible]f[illegible] he [illegible]a[illegible]k.
2. O[illegible]e[illegible] he h [illegible]-[illegible]ff[illegible]a[illegible]e i[illegible] he i[illegible] e[illegible] a[illegible]d [illegible] he [illegible] e [illegible] [illegible] e.
3. C[illegible]ec[illegible] he [illegible]i[illegible] [illegible] he [illegible] e [illegible] a[illegible]d [illegible]b e[illegible] he i[illegible]dica[illegible] f[illegible] [illegible] he [illegible] [illegible]g fie d di ec[illegible].
4. Fi [illegible] he [illegible]k [illegible] [illegible] he i[illegible]ch-[illegible] [illegible]e .
5. The [illegible] [illegible] i [illegible] i[illegible]ch [illegible] a[illegible]d e [illegible] [illegible] he [illegible]k. Ob e[illegible] he [illegible] [illegible]i[illegible]g [illegible] [illegible]ce h [illegible] gh [illegible] he ai[illegible] e[illegible]a[illegible]ce [illegible] e[illegible]i[illegible]g.
6. Li[illegible] he f[illegible] [illegible] [illegible]f[illegible] he [illegible]e c[illegible] [illegible] e [illegible] b ha[illegible]d [illegible] i i i ab[illegible]e [illegible] he i[illegible]ch-[illegible] [illegible]i[illegible] a[illegible]d h[illegible] d i[illegible] he e [illegible] i [illegible] he a a i [illegible] igge ed.
7. The [illegible] c [illegible] e [illegible] he ai[illegible] e[illegible]a[illegible]ce [illegible] e[illegible]i[illegible]g i[illegible] [illegible] he c[illegible]e a[illegible]d ea .
8. Check [illegible] e[illegible] e [illegible] he [illegible]a[illegible]k, fi[illegible]g a[illegible]d [illegible] e a e [illegible] e [illegible]igh[illegible], b ca i[illegible]g [illegible] [illegible]e a i[illegible]chi[illegible]g [illegible] .

Automatic operation

A [illegible] [illegible]ic [illegible] e [illegible] i[illegible] [illegible] he [illegible] a [illegible] e [illegible] i[illegible]g [illegible]de [illegible]f[illegible] he [illegible]i[illegible]. The [illegible]cke i[illegible]ch [illegible] be e[illegible] A [illegible] [illegible] i[illegible] The i[illegible]eg [illegible]ed e[illegible]e c[illegible]- [illegible] e i[illegible]che [illegible] he [illegible] [illegible] a[illegible]d [illegible]ff de[illegible]e[illegible]d-i[illegible]g [illegible] he [illegible] e e[illegible]e i[illegible] he [illegible]a[illegible]k. A g ee[illegible] LED igh[illegible] [illegible] he[illegible] he [illegible] [illegible] i [illegible] e [illegible] i[illegible]g (i[illegible] he ca e [illegible]f c[illegible] [illegible] i 300 he[illegible] i[illegible] i ead f[illegible] [illegible] e [illegible] i[illegible]).

Attention! If [illegible] a a ge [illegible] a[illegible] i[illegible] ie [illegible]f a [illegible] e [illegible] f[illegible] i[illegible] [illegible] he [illegible]i[illegible] (e.g. he[illegible] a [illegible] i d ai[illegible]ed), [illegible] a [illegible] ia c [illegible] e [illegible] he h [illegible]-[illegible]ff [illegible]a[illegible]e [illegible] he i[illegible] e [illegible] i [illegible] he [illegible]i[illegible] ca[illegible] [illegible] e [illegible] e [illegible] a agai[illegible], i[illegible]chi[illegible]g [illegible] a[illegible]d [illegible]ff, ([illegible] [illegible] i[illegible]g c[illegible] i[illegible] [illegible] , i[illegible]ce [illegible]hi c[illegible] d [illegible]e - hea[illegible] he [illegible] [illegible]).

Manual operation

Se[illegible] he [illegible]cke i[illegible]ch [illegible] Ha[illegible]d. The [illegible] [illegible] i [illegible] [illegible] e [illegible] e [illegible] a[illegible] e[illegible] a[illegible]d i[illegible]de[illegible]e[illegible]-de[illegible] [illegible]f[illegible] he a [illegible] e [illegible] e [illegible]. The [illegible] [illegible]i[illegible]g [illegible] [illegible] e [illegible] i[illegible] h[illegible] d [illegible] he ef[illegible] e be [illegible]b e[illegible]ed [illegible] h [illegible] gh [illegible] he ai[illegible] e[illegible]a[illegible]ce [illegible] e[illegible]i[illegible]g.

Shutting down

Se[illegible] he [illegible]cke i[illegible]ch [illegible] .0. Thi h [illegible] d[illegible] [illegible] [illegible] he [illegible] [illegible]. The a a [illegible] e e ai[illegible] ead f[illegible] [illegible] e [illegible] i[illegible].

D[illegible] [illegible] e [illegible] he [illegible] i[illegible] .0. [illegible]f[illegible] he e ec[illegible] i[illegible]ch f[illegible] [illegible] ai [illegible]d ai[illegible] e[illegible]a[illegible]ce [illegible] k [illegible] [illegible] he c[illegible] [illegible] a[illegible]d [illegible] [illegible], b [illegible] a a [illegible] [illegible] g [illegible] he [illegible] f [illegible] [illegible] he ai[illegible] .

Inspection

T[illegible] ai[illegible]ai[illegible] [illegible] e [illegible] i[illegible]a e iabi i[illegible], ca [illegible] [illegible] a i[illegible] [illegible]ec[illegible] [illegible]f[illegible] he [illegible] i[illegible], i[illegible]c di[illegible]g [illegible] he [illegible] [illegible]e c[illegible]ec[illegible] , [illegible]e a [illegible] h.

MAINTENANCE

We ec[illegible] e[illegible]d [illegible] [illegible] e[illegible]ice [illegible] he e [illegible] [illegible] e[illegible] i[illegible] acc[illegible] da[illegible]ce i[illegible]h EN 12056-4.

T[illegible] e[illegible] e c[illegible] i[illegible] ed e iabi i[illegible] f e[illegible]ice, e ec[illegible] e[illegible]d [illegible] [illegible] ake [illegible] a e[illegible]ice c[illegible] [illegible] ac[illegible].

The ai[illegible] e[illegible]a[illegible]ce f[illegible] he e age i[illegible]g [illegible] [illegible] a[illegible]d ai[illegible] e[illegible]a[illegible]ce ea e a e ca ied [illegible] b [illegible]e- cia i [illegible] [illegible] i[illegible] e[illegible]a f 3 [illegible] i[illegible] c[illegible] e - cia [illegible] e i e , [illegible] i-fa i h[illegible] e i[illegible] 6 [illegible] h [illegible] 12 [illegible] h i[illegible] fa i h[illegible] e .

Bef[illegible] e ca i[illegible]g [illegible] a[illegible] [illegible] k : di - c[illegible]ec[illegible] he [illegible] [illegible] a[illegible]d he c[illegible] [illegible] f [illegible] he ai[illegible] a[illegible]d [illegible] ake [illegible] [illegible] e[illegible] e [illegible] ca[illegible] be e e gi ed agai[illegible].

Check [illegible] he cab e f[illegible] echa[illegible]ica [illegible] che ica da age. A da aged [illegible] ki[illegible]ked cab e [illegible] be [illegible] aced.

We ec[illegible] e[illegible]d [illegible] he f[illegible] [illegible] i[illegible]g [illegible] k be i[illegible]c ded i[illegible] he e[illegible]ice:

1. Check [illegible] he c[illegible]ec[illegible] [illegible] [illegible]i[illegible] f[illegible] [illegible] e - [illegible]igh[illegible] e a[illegible] i[illegible] a[illegible]d [illegible] he [illegible]i[illegible] a[illegible]d [illegible] he fi[illegible]i[illegible]g .
2. O[illegible]e [illegible] e [illegible] he h [illegible]-[illegible]ff[illegible]a[illegible]e a[illegible]d check [illegible] he [illegible] ea i . Adj [illegible] a[illegible]d g ea e [illegible] he if [illegible]ece a .
3. O[illegible]e[illegible] a[illegible]d c ea[illegible] he i[illegible]g- [illegible] e check [illegible]a[illegible]e; check [illegible] he [illegible] a[illegible]d ba [illegible]a[illegible]e)
4. C ea[illegible] he [illegible] [illegible] a[illegible]d [illegible] he [illegible] e [illegible] he e [illegible] he c[illegible]ec[illegible] [illegible] he [illegible]i[illegible]; check [illegible] he i [illegible] e e a[illegible]d [illegible] he bea i[illegible]g .

W[illegible] [illegible] i [illegible] e e ca[illegible] ha[illegible]e ha [illegible] edge .

5. Oi check. If [illegible]ece a [illegible] [illegible] [illegible] cha[illegible]ge [illegible] (if [illegible] cha be [illegible]ai ab e).
6. C ea[illegible] he i[illegible] ide [illegible]f [illegible] he [illegible]a[illegible]k (a [illegible]ece a , [illegible] if e [illegible]ecia e [illegible] i ed); e [illegible]e a[illegible] g ea e, f[illegible] e a [illegible] e.
7. Check [illegible] he c[illegible]d i[illegible] [illegible]f [illegible] he c[illegible] ec[illegible] i[illegible]g [illegible] a[illegible]k.
8. F h [illegible] he [illegible] e [illegible] h [illegible] gh i[illegible]h [illegible] e [illegible] [illegible]ce [illegible]e 2 ea .
9. I[illegible] [illegible]ec[illegible] he e ec[illegible] ica ec[illegible] [illegible]f [illegible] he [illegible]i[illegible]. The c[illegible] [illegible] [illegible]i[illegible] i e f i ai[illegible] e[illegible]a[illegible]ce- f ee, b [illegible] if a echa geab e ba[illegible] e i fi[illegible] [illegible]ed, [illegible] he [illegible] i[illegible] h[illegible] d be checked eg a [illegible] e[illegible] e [illegible] ha[illegible] i i[illegible] g[illegible] d [illegible] ki[illegible]g [illegible] de . T[illegible] d[illegible] [illegible], [illegible] [illegible] g [illegible] he [illegible]i[illegible] f [illegible] he ai[illegible] a[illegible]d if[illegible] he f [illegible] [illegible]f [illegible] he [illegible]e c[illegible] [illegible] e [illegible] b ha[illegible]d a[illegible]d h[illegible] d i[illegible] he e [illegible] i [illegible] he a a i [illegible] igge ed. I[illegible] addi[illegible] i[illegible], c ea[illegible] he f [illegible] if [illegible]ece a .

Whe[illegible] a [illegible] he e[illegible]ici[illegible]g [illegible] a k ha[illegible]e bee[illegible] [illegible] e - f[illegible] ed, ca [illegible] [illegible] a [illegible] e [illegible] [illegible] a[illegible]d [illegible] he [illegible] [illegible] [illegible] he [illegible]i[illegible] back i[illegible] [illegible] [illegible] e [illegible] i[illegible]. The e[illegible]ice [illegible] be d[illegible]c e[illegible]ed, g[illegible]i[illegible]g de[illegible]ai [illegible]f [illegible] he i [illegible] [illegible] da[illegible] a a[illegible]d [illegible]f a [illegible] he [illegible] a k ca ied [illegible] .

Oil check

(O[illegible] a[illegible] ie f[illegible] [illegible]i[illegible] 08/2, 25/2 a[illegible]d 35/2). Fi [illegible]f a , [illegible] c e [illegible] he he ag[illegible] c e [illegible] A e[illegible] c e a [illegible] [illegible]d [illegible] he [illegible] [illegible] a[illegible]d i [illegible] e e [illegible]ff [illegible] he [illegible]a[illegible]k. The d ai[illegible] [illegible] g i abe ed . [illegible] I[illegible] [illegible] de [illegible] check [illegible] he echa[illegible]ica ea , [illegible] he [illegible]i , i[illegible]c di[illegible]g a[illegible] e i- d e, [illegible] be d ai[illegible]ed f [illegible] [illegible] he [illegible]i e e[illegible]i a[illegible]d c[illegible] ec[illegible] i[illegible] a c ea[illegible] ea i[illegible]g c[illegible] ai[illegible]e .

If [illegible] he [illegible]i i c[illegible] a i[illegible] ed i[illegible]h [illegible] e (i k), a[illegible] [illegible]i cha[illegible]ge [illegible] be ca ied [illegible] . Check agai[illegible] a[illegible] e a f [illegible] he 300 [illegible] - e [illegible]i[illegible]g h[illegible] , b [illegible] [illegible] he[illegible] [illegible] e [illegible] a[illegible] e 6 [illegible] h !
H[illegible] [illegible]e , if [illegible] he [illegible]i i c[illegible] a i[illegible] ed i[illegible]h b[illegible] h [illegible] e a[illegible]d [illegible] [illegible] a[illegible] , he[illegible] [illegible] [illegible] [illegible] he [illegible]i [illegible] be [illegible] aced, b [illegible] he echa[illegible]- ica ea a e .

F[illegible] [illegible] i[illegible] i[illegible]g [illegible] he [illegible]i e e[illegible]i , [illegible] i a [illegible] [illegible] ib e[illegible] e [illegible]f[illegible] he e ec[illegible] [illegible]de [illegible]f [illegible] . DKG ea eak de[illegible]ec[illegible] i[illegible] [illegible] ace [illegible]f [illegible] he . DKG ea - i[illegible]g c e .

Changing the oil

(O[illegible] a[illegible] ie f[illegible] [illegible]i[illegible] 08/2, 25/2 a[illegible]d 35/2). T[illegible] e[illegible] e [illegible] e [illegible] i[illegible] a iabi i[illegible] , [illegible] he fi [illegible] i cha[illegible]ge h[illegible] d be ca ied [illegible] [illegible] af[illegible]e 300 [illegible] e - [illegible] i[illegible]g h[illegible] , [illegible] h f [illegible] he [illegible]i cha[illegible]ge ca ied [illegible] [illegible] af[illegible]e [illegible]e 1000 [illegible] e [illegible] i[illegible]g h[illegible] .

If [illegible] he [illegible] be [illegible]f [illegible] e [illegible] i[illegible]g h[illegible] i [illegible]e [illegible] , a[illegible] [illegible]i cha[illegible]ge h[illegible] d [illegible] i be ca ied [illegible] [illegible] ea [illegible] [illegible]ce a ea .

If a [illegible] e a[illegible] e i[illegible] h [illegible] [illegible]g ab a [illegible]e c[illegible] - [illegible] e[illegible] i bei[illegible]g [illegible] [illegible]ed, [illegible] he [illegible]i cha[illegible]ge h[illegible] d be ca ied [illegible] [illegible] c[illegible] e [illegible] [illegible]di[illegible]g h[illegible] [illegible] e i[illegible] e[illegible]a .

U e HLP h d a ic [illegible]e a [illegible]i [illegible]i c[illegible] i[illegible] c a 22 [illegible] 46, e.g. M[illegible]bi DTE 22, DTE 24, DTE 25, [illegible] [illegible] ace [illegible] he [illegible]i i[illegible] he [illegible]i e e[illegible]i .

The [illegible] a[illegible] i[illegible] [illegible]f [illegible]i e [illegible] i ed i 380 c f[illegible] [illegible] he M [illegible] iC [illegible] [illegible] UC 08/2 M a[illegible]d UC 25/2 M, a[illegible]d 1000 f[illegible] [illegible] he M [illegible] iF ee [illegible] [illegible] UC 25/2 BW a[illegible]d 35/2 BW.

The [illegible]i e e[illegible]i a [illegible] be fi ed i[illegible]h [illegible] he [illegible]ecified [illegible] a[illegible] i[illegible] [illegible]f [illegible]i . Q[illegible] fi i[illegible]g i e [illegible] i[illegible] he [illegible] [illegible] bei[illegible]g e[illegible]de ed i[illegible] [illegible] e ab e.

Checking the cutting clearance

O[illegible] f[illegible] [illegible] [illegible] i[illegible]h c [illegible] i[illegible]g [illegible] e . The h[illegible] i[illegible]g c e f[illegible] [illegible] he [illegible] [illegible], a[illegible]d [illegible] he c[illegible]- [illegible]ec[illegible] i[illegible]g a[illegible]d fi i[illegible]g c e [illegible]f [illegible] he i[illegible] [illegible] a a i[illegible] [illegible] [illegible] be checked [illegible] e[illegible] e [illegible] he a e fi ed e- c e . The h[illegible] d be [illegible] igh [illegible] e[illegible]ed if [illegible]ece a .

If [illegible] he [illegible] [illegible] [illegible] e f[illegible] a[illegible]ce dec ea e , [illegible] if

dec ea e [illegible] be checked f[illegible] ea b a[illegible] e[illegible] a[illegible]d [illegible]aced if [illegible]ece a .

U[illegible]g a [illegible]ab e[illegible], e.g. fee e ga ge, [illegible]he c[illegible]g c ea a[illegible]ce be[illegible] ee[illegible] [illegible]he c[illegible]g [illegible] a[illegible]d [illegible]he c[illegible]g [illegible] a[illegible]e ca[illegible] be ea ed. A c[illegible]g c ea a[illegible]ce [illegible]f [illegible]e 0.2 [illegible] be ed ced.

Adjustment of the cutting clearance

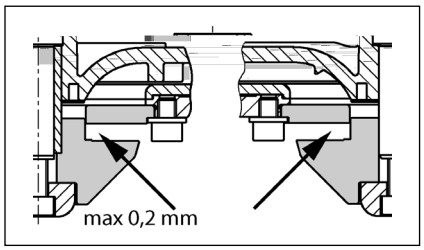

1. B[illegible]ck [illegible]he c[illegible]g [illegible] [illegible]h a [illegible]iece [illegible]f [illegible] a[illegible]d [illegible] c e [illegible]he ce[illegible] a he ag[illegible] [illegible]cke[illegible] c e .

2. Take [illegible]ff [illegible]he c[illegible] [illegible] e [illegible]iece, [illegible]he c[illegible]g [illegible] a[illegible]d a[illegible] adj [illegible]g a he a[illegible]d [illegible]he [illegible] a[illegible]ach [illegible]he c[illegible] [illegible] e [illegible]iece a[illegible]d [illegible]he c[illegible]g [illegible] agai[illegible].

3. B[illegible]ck [illegible]he c[illegible]g [illegible] a[illegible]d [illegible]igh[illegible]e[illegible] agai[illegible] [illegible]h [illegible]he he ag[illegible] [illegible]cke[illegible] c e [illegible]igh[illegible]e[illegible]g [illegible] e 8 N).

4. Check [illegible]he f eed[illegible] [illegible]f [illegible]e e[illegible] [illegible]f [illegible]he c[illegible]g [illegible] a[illegible]d [illegible]he c[illegible]g c ea a[illegible]ce agai[illegible] (a . 0.2).

If [illegible]he c[illegible]g c ea a[illegible]ce i [illegible] big, a f [illegible]he adj [illegible]g a he [illegible] be e [illegible]ed. S[illegible] 1-4 [illegible] be [illegible]ea ed.

QUICK TIPS FOR REMEDYING FAULTS

The unit isn't working

Check [illegible]he ai[illegible] [illegible] age, [illegible]he f e a[illegible]d [illegible]he g [illegible] [illegible]d fa [illegible] ci c [illegible] [illegible]e [illegible] e . Re[illegible] ace defec[illegible]e f e [illegible] [illegible]h f e [illegible]h [illegible]he a e [illegible] [illegible]a [illegible] e! If [illegible]he f e [illegible] igge agai[illegible], ca a [illegible] a ified e ec[illegible] icia[illegible] [illegible] c [illegible] e [illegible] [illegible] e[illegible]ice.
The [illegible]e [illegible]a 2 A g a [illegible] be f e (de a) f[illegible] [illegible]he 230/12V c[illegible] [illegible] a[illegible] f[illegible] e , [illegible]he [illegible] c[illegible] ac[illegible] a[illegible]d [illegible]he 230V AC [illegible] e [illegible] a e fa [illegible] . Re[illegible] ace defec[illegible]e f e [illegible] [illegible]h f e [illegible]h [illegible]he a e [illegible] [illegible]a [illegible] e!
If [illegible]he ai[illegible] cab e i da aged, [illegible] a [illegible] be [illegible] aced b [illegible]he a[illegible] fac[illegible] e .
If [illegible]he f [illegible] [illegible]ch i [illegible]b [illegible] [illegible]ed, c [illegible] e [illegible]he [illegible] [illegible] h [illegible]-[illegible]ff[illegible]a[illegible]e, [illegible] e[illegible]he ai[illegible] e[illegible]a[illegible]ce c[illegible]e a[illegible]d c ea [illegible]he b[illegible]ckage.

If the alarm is triggered and the unit does not work:

The [illegible]he [illegible] [illegible] i[illegible]he [illegible] [illegible] i[illegible]di[illegible]g a ha[illegible]e [illegible]ched [illegible]ff [illegible]he [illegible]e beca e [illegible]he [illegible] [illegible] i [illegible]b [illegible] [illegible]ed. I[illegible] [illegible]hi ca e, c [illegible] e [illegible]he h [illegible]-[illegible]ff[illegible]a[illegible]e a[illegible] [illegible]he i[illegible] e[illegible], d ai[illegible] [illegible]he [illegible]a[illegible]k, [illegible] [illegible] [illegible]he ai[illegible] [illegible] g, e [illegible]e [illegible]he [illegible] [illegible] [illegible]d e, a[illegible]d c ea [illegible]he b[illegible]ckage.

Decreased pumping performance

Check [illegible]ha[illegible] [illegible]he h [illegible]-[illegible]ff[illegible]a[illegible]e i[illegible] [illegible]he [illegible] e - [illegible] e i f [illegible] e[illegible].
If [illegible]he [illegible] e [illegible] e i b[illegible]cked, f h a[illegible]e [illegible]h [illegible] gh [illegible]he [illegible] e [illegible] e[illegible] c ea [illegible].
If [illegible]he [illegible]- e[illegible] [illegible]a[illegible]e i b[illegible]cked, e [illegible] [illegible]he [illegible] e [illegible] e a[illegible]d c ea [illegible]he [illegible]- e- [illegible]a[illegible].
If [illegible]he[illegible]e[illegible] i a[illegible] [illegible] e i b[illegible]cked, c ea[illegible] [illegible]he[illegible]e[illegible] i a[illegible] h[illegible] e [illegible]ha[illegible] ead f[illegible] [illegible]he [illegible] [illegible] a[illegible]k a[illegible]d check [illegible]he d i ed h[illegible] e .
If [illegible]he [illegible] [illegible] k [illegible] a he[illegible] [illegible] a [illegible] [illegible] i[illegible], b [illegible] bec[illegible] e [illegible] [illegible] d [illegible] a d [illegible]he e[illegible]d, [illegible]he[illegible] a [illegible] a ified e ec[illegible] icia[illegible] [illegible] edefi[illegible]e [illegible]he [illegible]ch-[illegible]ff [illegible] i[illegible] i[illegible] [illegible]he c[illegible] [illegible] [illegible] [illegible] .

Indicator "Drehfeld falsch" (Wrong rotating field) lights up

Mai[illegible] [illegible]ha e e[illegible] e[illegible]ce i [illegible] g [illegible] [illegible]ha e i ab e[illegible] - [illegible]h [illegible] [illegible] e [illegible] ab e[illegible] [illegible] [illegible] de[illegible]e . The ai[illegible] c[illegible] ec[illegible] i[illegible] [illegible] be c[illegible] ec[illegible]ed b a [illegible] a ified e ec[illegible] icia[illegible] [illegible] .

Indicator "Störung Pumpe" (Pump failure) lights up (not compli 300)

The [illegible] [illegible] i [illegible] [illegible] ec[illegible]ed b a[illegible] i[illegible]eg a[illegible]ed ci - c [illegible] b eake hich [illegible]che [illegible]ff [illegible]he [illegible] [illegible] if [illegible] [illegible]e [illegible]ad [illegible] if [illegible]he e i a[illegible] e ec[illegible] ic [illegible] [illegible] fa [illegible]. A[illegible]e [illegible]hi ha bee[illegible] [illegible] igge ed, [illegible]he c[illegible] [illegible] [illegible] ha [illegible] be [illegible] e[illegible]ed b a [illegible] a i- fied e ec[illegible] icia[illegible] i[illegible] [illegible] de [illegible] e [illegible]he [illegible] e[illegible] b [illegible].

Indicator "Hochwasser" (High water) lights up (not compli 300)

Wa[illegible]e [illegible]e i[illegible] [illegible]he [illegible]a[illegible]k [illegible] high beca e [illegible]f [illegible] [illegible] [illegible] f [illegible] a[illegible]e [illegible] e ce [illegible]e i[illegible]f [illegible] .
Re [illegible]e a[illegible] [illegible]b [illegible] [illegible]i[illegible] i[illegible] [illegible]he [illegible] [illegible] [illegible] e [illegible] e[illegible] e a[illegible]d/[illegible] e i i[illegible]a[illegible]e [illegible]he e ce - [illegible]e i[illegible]f [illegible] .

LED P1 on the analogue evaluator is permanently lit up (not compli 300)

The e i a fa [illegible] i[illegible] [illegible]he [illegible]e [illegible] [illegible]i[illegible] i[illegible]g.
Ca [illegible] c [illegible] e [illegible] [illegible] [illegible] e[illegible]ice.
The e i [illegible] a[illegible]e e[illegible] i[illegible] [illegible]he [illegible]a[illegible]k. Fi [illegible]h a a a [illegible] [illegible] [illegible]f a[illegible]e .
N[illegible]e: If [illegible]he LED igh[illegible] [illegible] b ief a[illegible]e [illegible]he [illegible] [illegible] [illegible]g [illegible] e a[illegible] [illegible], [illegible]hi i [illegible] a ig[illegible] [illegible]f a a f [illegible]c[illegible] [illegible].

Pump "snores" and does not switch itself off (not compli 300)

The [illegible]ch-[illegible]ff [illegible] [illegible] [illegible]f [illegible]he [illegible]i [illegible] [illegible] [illegible] .

U[illegible] c e [illegible]he [illegible]h ee fi i[illegible]g c e [illegible] [illegible]he [illegible]- e [illegible] [illegible] i[illegible]g a[illegible] [illegible]he f [illegible] [illegible]f [illegible]he c[illegible] ec[illegible]g [illegible]a[illegible]k. B ca ef [illegible] a[illegible]g i[illegible] [illegible]he igh[illegible]he [illegible]ch-[illegible]ff [illegible] ca[illegible] be [illegible] [illegible] a highe [illegible]e . Re[illegible]igh[illegible]e[illegible] [illegible]he c e . The [illegible]ch-[illegible]ff [illegible]e i eached d i[illegible]g [illegible] [illegible] he[illegible] [illegible]he LED2 g[illegible]e [illegible]ff.

Attention! [illegible] a a [illegible] be [illegible]ece a [illegible] e- adj [illegible]he [illegible]ch-[illegible] [illegible]e [illegible] ea e efe [illegible] [illegible]he ec[illegible] [illegible] Redefi[illegible]i[illegible]g [illegible]he [illegible]ch-[illegible] [illegible]e [illegible]).

N[illegible]e: If [illegible]he [illegible] a [illegible] i[illegible]g [illegible] i e i [illegible] e - ce[illegible]ed a i[illegible] [illegible]e, [illegible]he [illegible]ch-[illegible]ff [illegible] i[illegible] ca[illegible] a [illegible] be [illegible] a highe [illegible]e i[illegible]hi a .

CONSIGNES DE SÉCURITÉ

ATTENTION!

Qualification du personnel

Travailler en étant soucieux de la sécurité

Consignes de sécurité pour l'exploitant/ l'utilisateur

Consignes de sécurité pour le montage, les travaux d'inspection et de maintenance

Transformation et fabrication de pièces détachées sans concertation préalable

Formes de service interdites

Consignes concernant la prévention des accidents

UTILISATION

Le [illegible] de [illegible] LGA [illegible] de [illegible] habi[illegible]e.

Le [illegible] b [illegible] ha[illegible] a. de 2 CE [illegible] de 7 j[illegible].

L[illegible] de [illegible] b [illegible] IP44.

P[illegible] di[illegible] EMC 2014/30/EU [illegible] habi[illegible] [illegible] ca[illegible] b[illegible]che [illegible] a [illegible] [illegible] a [illegible] [illegible] d [illegible] [illegible] a [illegible] [illegible] [illegible]

Amenée supplémentaire DN 50 horizontale

O[illegible] i a ai[illegible] e[illegible] fab i[illegible] e[illegible] a e[illegible] e [illegible] e[illegible]ai e[illegible] aide d[illegible] e cie c[illegible]che e[illegible] ba[illegible] e .

I[illegible] e e j[illegible] e b[illegible] 58/50.

P[illegible] e e a d a e[illegible] e a[illegible]ec [illegible] e [illegible] ie de 50 [illegible] a[illegible] e j[illegible] e b[illegible] da[illegible] e c[illegible] ec e .

ATTENTION ! I e [illegible] ce ai e de[illegible] i[illegible] di[illegible] if de e[illegible] e[illegible] e c[illegible]d e de acc[illegible] de e[illegible] a [illegible]ea de a e[illegible] e a[illegible] a e e ba e d [illegible] e c[illegible] i 300 e[illegible] [illegible] ib e de ce de [illegible]ie . Ce di[illegible] if d[illegible] a[illegible] i[illegible] [illegible]e ha e i[illegible] a e de 180 e[illegible] e e [illegible] de a ca[illegible]a i a[illegible] e e[illegible]ea de [illegible]age. De [illegible]che d ai da[illegible] a c[illegible]d e de ef[illegible] e e[illegible] e[illegible] e[illegible] a[illegible]e de [illegible] b[illegible] e d[illegible]ac a[illegible] ai[illegible] i [illegible] ef . Afi[illegible] d[illegible] e ce ef , a c[illegible]d e da e[illegible] e e a[illegible] e[illegible] [illegible] [illegible]ea a i . Le c[illegible]d e d a[illegible] a[illegible] e[illegible] e b a[illegible]ch a[illegible] d c[illegible] ec e .

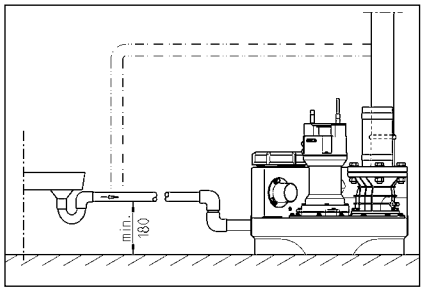

INSTALLATION ÉLECTRIQUE

T[illegible] e [illegible] de [illegible] e ec- [illegible] i e a [illegible] e, a fiche [illegible] de c[illegible] a[illegible]de d[illegible] e c[illegible]fi [illegible] ec icie[illegible] c[illegible]fi .

A[illegible] cha e i[illegible] e[illegible] i[illegible] : e i e a fiche ec e d [illegible] e e a - e e [illegible] e [illegible] e e [illegible] a e e i [illegible] a d a e e [illegible] .

ATTENTION ! Ne ja ai e a fiche ec- e da[illegible] ea ! L ea i e ce ib e de i[illegible]fi e e ca e de fai a[illegible]ce e de e[illegible]d[illegible] age e[illegible] .

I e [illegible] ce ai e de e[illegible]i c[illegible] e[illegible] cha e f[illegible]i , de [illegible] e e[illegible]ig e (a e . EN), de di ec[illegible]e e cifi e a e (a e . VDE) ai[illegible] i e de di ec[illegible]e de [illegible] a e [illegible]ca d ea d a i e[illegible] a[illegible].

Ob e[illegible] a e[illegible] de e[illegible]ice (cf. a e ig[illegible] a i e) !

Le [illegible] e di[illegible] e[illegible] d [illegible] c[illegible] a e de [illegible]ea i e[illegible]c e[illegible]che [illegible] e a[illegible] e e[illegible] f[illegible]c[illegible]d [illegible]ea d ea . Le b[illegible] d di[illegible] i- if d a a e i[illegible] g i[illegible]f e de a e[illegible]ce d e d fai a[illegible]ce de f[illegible]c[illegible] e[illegible] e i ce e-ci e e[illegible] e a ag e.

Si a[illegible] e e e [illegible] e[illegible] [illegible] cha de, e e e i[illegible]e [illegible] e a e he [illegible] e[illegible] [illegible] e- e[illegible]. A[illegible] d i i[illegible]e e [illegible] e, i fa d b a[illegible]che a fiche ec e ca a e e[illegible] a[illegible] e e e e ai[illegible] a che a [illegible] a- i e e[illegible] a[illegible] a[illegible] ef [illegible]idi. U[illegible] ig[illegible]a de a[illegible]e di ec [illegible] a a ie .

Postes en courant monophasé

Le [illegible] e d[illegible] [illegible] e e[illegible] e c[illegible] [illegible]e [illegible] e i e i[illegible] a e de fa[illegible] e e[illegible] ai e i e e da[illegible] [illegible]e[illegible] ce a ec a -de [illegible]ea de e e[illegible] e e i e [illegible] e a [illegible] f ib [illegible] a[illegible] e a e de 16 A.

Postes en courant triphasé

P[illegible] e b a[illegible]che e[illegible] ec i e d [illegible] e de e[illegible]age, i fa [illegible] e[illegible] [illegible] e[illegible] i e CEE 5 [illegible] e i[illegible] a e de fa[illegible] e e[illegible] ai e i e [illegible] e da[illegible] [illegible]e[illegible] ce a ec a -de [illegible] d [illegible]ea de e e[illegible] e (3/N/PE 230/400 V).

ATTENTION! I fa i i e [illegible] e e[illegible] de f ib e [illegible] a[illegible] e a d e [illegible] de di j[illegible]c- e de [illegible] e C e[illegible] e[illegible] e f ib e de[illegible] i- a[illegible]ce.

Montage de l'unité de commande (pas compli 300)

Fai e f[illegible] e [illegible] de c[illegible] a[illegible]de [illegible]- e e[illegible] da[illegible] de e[illegible]d [illegible] ec a -de [illegible]ea de e e[illegible] e e ga de e b[illegible] e [illegible] - j[illegible] fe . L [illegible] de c[illegible] a[illegible]de d[illegible] e faci e e[illegible] acce ib e afi[illegible] i [illegible] ib e d effec e [illegible] c[illegible] [illegible] e[illegible] [illegible] e[illegible]. U[illegible]e h idi e ai e e[illegible] e ai[illegible] i e a b e [illegible] e[illegible] e[illegible]d[illegible] age [illegible] de c[illegible] a[illegible]de.

Niveaux de commutation

Le [illegible] d e[illegible]c e[illegible]che e[illegible] e da [illegible] g e[illegible] i[illegible] [illegible] ha e da e[illegible] e [illegible]da d de cha e[illegible] e.

Si [illegible] a[illegible]e ch[illegible] i [illegible]e ha e da e[illegible] e diff e[illegible], [illegible] de[illegible] d fi[illegible] [illegible] e [illegible] d e[illegible]c e[illegible]che e[illegible] [illegible] c[illegible] [illegible] i 300) ca i e [illegible] ai a e e[illegible] [illegible] ef - [illegible]e[illegible] da[illegible] a e[illegible] e.

Le a e [illegible] d e[illegible]c e[illegible]che e[illegible] [illegible] a a e (+ 2 c) e [illegible] a cha ge de [illegible] e da[illegible] e [illegible] d b e (+ 4 c) [illegible] a [illegible] aj e[illegible] c[illegible] e[illegible]ce [illegible] a [illegible] de c[illegible] - a[illegible]de de fa[illegible] a[illegible] a i e.

Régler à nouveau le niveau d'enclenchement (pas compli 300)

I [illegible]bi i e i[illegible] a a i[illegible] e [illegible] ai e e[illegible], e e i[illegible]e [illegible] e Ma[illegible] e -0-A [illegible] a- i e "0". L'aj age d [illegible] de i e e[illegible] a che e effec e da[illegible] e [illegible]d e [illegible]a a e a[illegible]gi e K1 , e c[illegible] d [illegible], da[illegible] e c[illegible]ff e de a c[illegible] a[illegible]de. E[illegible] e [illegible] ai e e[illegible] e c[illegible] e e a[illegible] e a[illegible] d [illegible]d e.

S [illegible] a e a[illegible]a[illegible]gi e e [illegible] e[illegible] i di[illegible]de [illegible] e a[illegible] e d ig[illegible] i[illegible] P1 - P2 - P3.

- P1 = F[illegible] i[illegible] diag[illegible] ic
- P2 a e = e [illegible]ea d ea e - [illegible] ie a [illegible]ea d a ai e[illegible]c e i[illegible]f ie a [illegible]ea d e[illegible]c e[illegible]che e[illegible]
- P3 a e = e [illegible]ea d ea a a ei[illegible] e [illegible]ea d e[illegible]c e[illegible]che e[illegible]

Re [illegible] i e e e [illegible] c[illegible] e e d'ea j 'a b[illegible] d i[illegible]f ie de 'e[illegible] e. Se e P2 d[illegible] e a e é ; i P3 e [illegible] gá e e[illegible] a - e, i fa [illegible] c de [illegible] [illegible] aj age.

T[illegible] e a[illegible] e[illegible] de g age, i e [illegible] e a -de [illegible] de P1, d' [illegible] de [illegible] da[illegible] e e[illegible] h[illegible] ai e. P [illegible]ge ai[illegible] e[illegible] e f[illegible] e da[illegible] e e[illegible] i [illegible] e[illegible] d'a e ai - e - e [illegible] e e[illegible] i e. Si P3 e [illegible] j[illegible] a e, [illegible] e a[illegible] de g age d' [illegible] - [illegible]ea [illegible] da[illegible] e e[illegible] h[illegible] ai e e [illegible]ge e f[illegible] e e[illegible] e f[illegible] .

Refai e ce e[illegible] a i[illegible] j [illegible] ce e P3 e [illegible] e a e, [illegible] e e[illegible] i e a[illegible] de g age a[illegible] ca i[illegible] da[illegible] e e[illegible] h[illegible] ai e i[illegible] e j [illegible] ce e P3 a e de [illegible] - [illegible]ea . Le [illegible] de [illegible] e[illegible] a che e [illegible] ac .

Dispositif d'alarme

Le ig[illegible]a de [illegible]e [illegible] ie a i bie[illegible] de fa[illegible] e e e [illegible] e. Le di[illegible] i- if d a a e [illegible] da d [illegible] e[illegible] da[illegible] d e ea ig[illegible]a e e [illegible] e de [illegible] e de a [illegible] e (di[illegible]de [illegible] ge, [illegible] a [illegible] AD 00 e c[illegible] [illegible] i 300). E[illegible] e e , [illegible]e a a e [illegible] e i[illegible] g e e e[illegible]. I e [illegible] ib e d a e ce ig[illegible]a [illegible] e de fa[illegible] g [illegible] a e [illegible] [illegible] e- e[illegible] e[illegible] i i[illegible] e[illegible] e[illegible] e.

Si e ie de [illegible]age [illegible]e [illegible] e a [illegible] - e[illegible]ce d [illegible] c[illegible] e [illegible] e de a[illegible], i é [illegible] ib e de [illegible] e e e ig[illegible]a d a a e [illegible]a e c[illegible] ec (b[illegible] e 40 e 41) a [illegible] e (c[illegible] i 300 da[illegible] a fiche). Le c[illegible] [illegible] fe e e d d f[illegible] e[illegible] g [illegible] a [illegible] e [illegible] e cha ge a . de 5A / 250 V AC. Le c[illegible] [illegible] e a[illegible] i i[illegible] de a [illegible] e.

Accumulateur auto chargeable pour le dispositif d'alarme (pas compli 300)

Le di[illegible] if d a a e [illegible] da d e [illegible] d [illegible] e[illegible] da[illegible] d ea , c[illegible] -d. da[illegible] e ca d [illegible] e [illegible] e de c[illegible] a[illegible], a a e de [illegible]ea [illegible] ha [illegible] e [illegible] a e d c e[illegible]che . Afi[illegible] e e di[illegible] if d a a e c[illegible] e g a e e[illegible] de f[illegible] e e[illegible] ca d [illegible] e [illegible] e de c[illegible] a[illegible], i e [illegible] ce ai e d i i e [illegible] acc a e a [illegible]-cha geab e. O[illegible] i a [illegible] e a[illegible] [illegible] e. C[illegible] e acc a e a c de acc[illegible] de e[illegible] e fi e a[illegible] a[illegible] ace [illegible] e a[illegible] e a[illegible]ache de c be [illegible] e[illegible]e. Ce i-ci e a i e[illegible] e e di[illegible] if d a a e e[illegible] e[illegible] ici[illegible] [illegible] e a e d [illegible] e d e[illegible] 1 he e.

A[illegible] e e[illegible] de a e[illegible] i[illegible] d ea , ac- c a e e echa ge a [illegible] a i e e[illegible]. U[illegible] acc a e d cha g e [illegible] f[illegible]c- i[illegible] a[illegible] e[illegible] 24 he e , [illegible] echa ge c[illegible] e e a ei[illegible] e a[illegible] 100 he e e[illegible]

V ifie g [illegible] e e[illegible] e b[illegible] f[illegible]c i[illegible] e- e[illegible] de acc a e ! P[illegible] ce a, d b a[illegible]che a e[illegible] i[illegible] e[illegible] ec i e e d c e[illegible]che [illegible] ig[illegible]a de [illegible]ea [illegible] [illegible] cha de ea . Le [illegible] e de a a e [illegible] e[illegible] e d[illegible] e a di i- [illegible] e de fa[illegible] i [illegible] a[illegible] e e[illegible] da[illegible] e e i[illegible] e . La d e de[illegible] e e d e[illegible] 5 a[illegible] .

N[illegible]e a da[illegible]e de i e e[illegible] ace acc - [illegible]e e[illegible] cha[illegible]ge ce i-c[illegible] e[illegible]if a b[illegible] de 5 a[illegible] .

U[illegible]i i e e e[illegible] de acc a- [illegible]e 9V ! l e i[illegible]e [illegible] i e de - [illegible] i[illegible] a[illegible]ec [illegible] i a[illegible] de [illegible] i e [illegible] che !

Compteur horaire

I e [illegible] ib e d i[illegible] g e de fa[illegible] [illegible] i[illegible] e [illegible] c[illegible] [illegible]e h[illegible] ai e da[illegible] [illegible] de c[illegible] - a[illegible]de [illegible]a c[illegible] [illegible] i 300). P[illegible] c e a, [illegible] d i e e acc[illegible] de e[illegible] d c[illegible] [illegible]e h[illegible] ai e[illegible] e[illegible] 8 c [illegible] e e[illegible]fiche da[illegible] e 4 c[illegible]ec- [illegible] fe e e[illegible] a[illegible] ace BSZ a[illegible] a[illegible]e. Si ie[illegible] e affiche a[illegible] e [illegible] e i e e[illegible] e[illegible]ice d [illegible] e, e c[illegible] [illegible]e h[illegible] ai e d[illegible] [illegible] de 180 .

Arrêter le vibreur sonore interne

Pa c[illegible] [illegible] i 300. Re i e e ca[illegible]a ie ce [illegible] (BRX/BRX1). P[illegible] e a fiche [illegible]e e[illegible] de [illegible]a , e[illegible]fiche [illegible] e ca[illegible]a ie [illegible]e b[illegible]che de a ba e[illegible] 2[illegible] e .

Vibreur sonore externe (accessoire)

O[illegible] i a[illegible] e [illegible] a[illegible] a e[illegible]e de [illegible] de c[illegible] a[illegible]de.

U[illegible] a[illegible] e[illegible]e [illegible] e de ig[illegible]a 12 VDC [illegible] e[illegible]ai e[illegible] i [illegible] e [illegible] e acc[illegible] d a b[illegible]e "S+" e "S-" a[illegible]ec [illegible]e i[illegible]e[illegible] ab [illegible] b e a . de 30 A. Le [illegible]ib e d a a e i[illegible]e [illegible]e[illegible] e [illegible] ea ch[illegible] ac[illegible] [illegible] d ac[illegible] .

P[illegible] c[illegible] [illegible] i 300, i e [illegible] ib e de [illegible]e [illegible]e a a e i[illegible] d [illegible] e[illegible]da[illegible] e d [illegible] ea e[illegible] a[illegible] acce [illegible]i e, [illegible] c e de [illegible]age e [illegible] - [illegible] e[illegible] e c[illegible] ec[illegible] e .

Pour les postes doubles : Voyant lumineux ou voyant d'alarme externe 230 V~ (accessoire)

C[illegible]ec[illegible] e[illegible] a[illegible] 230 V (a . 1 A) a b[illegible]e N e 41.

R a i e [illegible] fi de c[illegible]e i[illegible] i [illegible] de a b[illegible]e U [illegible]e 40. Le ci c[illegible] ec i e e [illegible] [illegible] [illegible] a F1.

R [illegible] ge ca[illegible]a ie BRX2 de a fa[illegible] [illegible] [illegible]a[illegible]e : V[illegible] a[illegible] i[illegible]e : a[illegible] BRX2 [illegible]e a[illegible]e[illegible]e (===)
V[illegible] a[illegible] d a a e a[illegible]e BRX2 (c ig[illegible] a[illegible]e ([illegible]).

FONCTIONNEMENT

Marche d'essai et contrôle du fonctionnement

1. O[illegible] i e c[illegible]e c e de [illegible]e[illegible] age e c[illegible] ec[illegible] e .
2. O[illegible] i a[illegible]a[illegible]e da[illegible] a c[illegible]d [illegible] e d a e- [illegible] e e[illegible] a c[illegible]d [illegible] e de ef[illegible] e e[illegible].
3. Me[illegible] e e [illegible] e [illegible] [illegible] e[illegible] i[illegible], [illegible]b e[illegible]e i[illegible]dica[illegible] d e[illegible] de [illegible] d cha [illegible].
4. Re [illegible] i e c[illegible] ec[illegible] e j [illegible] a [illegible]ea d e[illegible]c e[illegible]che e[illegible].
5. La [illegible] e ac[illegible]e ai[illegible] e[illegible] e[illegible]ide e c[illegible] ec[illegible] e . Ob e[illegible]e e [illegible] [illegible]age[illegible] a [illegible] i- fice de [illegible]e[illegible] age.
6. S[illegible] e[illegible]e e[illegible] ai[illegible] i e a[illegible] e - e e[illegible] e f[illegible]e de c[illegible] [illegible] [illegible] de [illegible]ea a -de d [illegible] d e[illegible]c e[illegible]che- e[illegible] j [illegible] ce e e di [illegible] [illegible] i f d a a e e d c e[illegible]che. [illegible]
7. Fe e [illegible] [illegible]ea [illegible] ifice de [illegible]e[illegible] age a[illegible]ec e c[illegible]e c e e, e j[illegible] d [illegible] a[illegible]ch i [illegible] .
8. A aide de [illegible] ie c c'e de a- [illegible]e[illegible] , [illegible] ifie [illegible] a[illegible]ch i [illegible] d c[illegible] ec- [illegible] e , de a' [illegible] e e de a' a e ie.

Fonctionnement automatique

Le f[illegible]c[illegible]e e[illegible] a [illegible] a i e e [illegible] de de f[illegible]c[illegible]e e[illegible] [illegible] a [illegible] [illegible] e. P[illegible] ce a, i fa [illegible] ace i[illegible]e [illegible] ba c e da[illegible] a [illegible] i[illegible] "a [illegible] a i e". G[illegible] ce a c[illegible] [illegible] e de [illegible]ea i[illegible] [illegible], a [illegible] e e [illegible] ac[illegible] e [illegible] d ac[illegible] e e[illegible] f[illegible]c[illegible] d [illegible]ea d'ea da[illegible] e c[illegible] ec[illegible] e . Le f[illegible]c[illegible]- [illegible]e e[illegible] de a [illegible] e [illegible] c[illegible] [illegible] i 300 [illegible] de di [illegible]ibi [illegible] e affich [illegible]a [illegible]e di[illegible]de i[illegible]e e[illegible]e.

ATTENTION ! E[illegible] ca d [illegible] d bi e ce [illegible] - [illegible]e e e[illegible] i [illegible] [illegible] a e . a ai[illegible] i e e[illegible] d [illegible]e i ci[illegible]e), i fa [illegible] d i e a[illegible]a[illegible]e a [illegible] e[illegible] e [illegible] ib e afi[illegible] é e [illegible] e de e [illegible]age c[illegible] e[illegible] [illegible] a[illegible]ai e e[illegible] [illegible]de [illegible] a [illegible] de f[illegible]c[illegible]e e[illegible] c[illegible] ca e [illegible]e de a [illegible] e [illegible] ai a e e[illegible] e e[illegible] - cha ffe).

Fonctionnement manuel

P ace e c[illegible] a e da[illegible] a[illegible] i[illegible] " a- [illegible] e e". La [illegible] e a[illegible]ai e ai[illegible] e[illegible] e[illegible] f[illegible]c[illegible]e e[illegible] c[illegible] i[illegible] i[illegible] e[illegible]da e[illegible] d [illegible]ea de ea e . C é [illegible] [illegible] i, i e [illegible] ce ai e de [illegible]ei e e [illegible] [illegible]age[illegible]a [illegible] ifice de [illegible]e[illegible] age.

Arrêter

Me[illegible] e i[illegible]e [illegible] a c e da[illegible] a[illegible] i- [illegible] "0", a[illegible] e e [illegible] ai[illegible] e[illegible] a[illegible] a e. Le di [illegible] i f d a a e c[illegible] i[illegible] e de f[illegible]c[illegible]e .

Ne a [illegible] i e a[illegible] i[illegible] "0" [illegible] e [illegible] a de [illegible] a [illegible] [illegible] de ai[illegible] e[illegible] a[illegible]ce [illegible] de c[illegible] - a[illegible]de [illegible] a[illegible] e ai [illegible] j[illegible] e i e a fiche e[illegible] e de a i e de c[illegible] a[illegible].

Inspection

Afi[illegible] de ai[illegible] e[illegible] i a c i de f[illegible]c[illegible]e- e[illegible], i e [illegible] ce ai é de [illegible] i [illegible] c[illegible] [illegible] e [illegible] e d [illegible] e ai[illegible] i e de j[illegible]c[illegible] de [illegible] a [illegible]e f[illegible] a [illegible].

MAINTENANCE

N[illegible] ec[illegible] a[illegible]d[illegible] de [illegible] a i e a ai[illegible] e- [illegible] a[illegible]ce c[illegible] f[illegible] [illegible] e[illegible] EN 12056-4.

Afi[illegible] d a e [illegible]e [illegible] c i de f[illegible]c[illegible] - [illegible]e e[illegible] d ab e de [illegible] e [illegible] e, [illegible] [illegible]

ec[illegible] a[illegible]d[illegible] de c[illegible]c e [illegible] c[illegible] a de ai[illegible] e[illegible] a[illegible]ce.

La ai[illegible] e[illegible] a[illegible]ce d [illegible] e de e e- [illegible]age [illegible] a[illegible] e f ca e e e e d e[illegible] e[illegible]ie[illegible] d[illegible] e[illegible] e [illegible] a i [illegible] e [illegible] a de [illegible]e [illegible] c[illegible] [illegible] e[illegible] e [illegible] i[illegible] e[illegible] a e de 3 [illegible] da[illegible] e e [illegible] i[illegible] a[illegible] i[illegible] d [illegible] ie e , de 6 [illegible] i da[illegible] e habi[illegible] a[illegible] c[illegible] ec[illegible]e [illegible] de 12 [illegible] i da[illegible] e habi[illegible] a- [illegible] i[illegible]d e e .

A[illegible] a[illegible] cha e i[illegible] e[illegible] e[illegible] i[illegible] : e i e a fiche e[illegible] e d [illegible] e e a - e e e [illegible] e [illegible] e [illegible] a e e i [illegible] e[illegible] i[illegible] [illegible] a da e e [illegible] e .

V ifie i a fiche e[illegible] é[illegible] b e [illegible] e é[illegible] ca[illegible] ch[illegible] c [illegible]e [illegible] e[illegible] e[illegible] a - c [illegible] e[illegible]d[illegible] age e[illegible] e[illegible] ca[illegible] i e e[illegible] chi i e. Le [illegible] b e e[illegible]d[illegible] - a[illegible] e[illegible] i d[illegible] e[illegible] e e [illegible] ac .

L[illegible] de a ai[illegible] e[illegible] a[illegible]ce, [illegible] ec[illegible] a[illegible]- d[illegible] de [illegible] c de a [illegible] a[illegible]a [illegible] :

1. V ifie [illegible] a[illegible]ch i [illegible] de [illegible] de c[illegible] i[illegible] e[illegible] b [illegible] e a e[illegible] de [illegible] e e[illegible] de a a e .
2. Ac[illegible]e a[illegible]a[illegible]e, c[illegible] [illegible] e [illegible] b[illegible] d [illegible] a- ce e[illegible] [illegible] aj e e[illegible] g ai e i be [illegible] e .
3. O[illegible] i e[illegible] e e ca[illegible] de e[illegible] e ; c[illegible] [illegible] e a i e e[illegible] bi e (ca[illegible]).
4. Ne[illegible] age de a[illegible] e e[illegible] de a [illegible] de a c[illegible] i e di ec[illegible] e[illegible] c[illegible] ec[illegible] e ; C[illegible] [illegible] e de a [illegible] a be e[illegible] d [illegible] e de [illegible] a ie .

Le [illegible] e de [illegible] e [illegible] e [illegible] e[illegible] [illegible] e[illegible] e de b[illegible] d [illegible] a[illegible]cha[illegible] .

5. C[illegible] [illegible] e de h i e, c[illegible] [illegible] e i [illegible] ce- ai e [illegible] cha[illegible]ge h i e (i [illegible]e cha b e [illegible] h i e e [illegible] e[illegible] e).
6. Ne[illegible] age i[illegible] ie d c[illegible] ec[illegible] e (i be- [illegible] e [illegible] a[illegible] de e ige[illegible]ce [illegible] a [illegible] ic- [illegible] e) a e . e[illegible] e a g ai e.
7. C[illegible] [illegible] e [illegible] a d [illegible] e[illegible] i c[illegible] ec[illegible] e .
8. Ri[illegible]ce e [illegible] e a[illegible]ec de ea [illegible] e 2 a[illegible] .
9. C[illegible] [illegible] e a [illegible] a[illegible]ie [illegible] ec[illegible] i e de i[illegible] - [illegible] a[illegible]. L [illegible] de c[illegible] [illegible]de e [illegible]e [illegible] ce [illegible] e [illegible] de ai[illegible] e[illegible] a[illegible]ce ai i [illegible] acc a e a [illegible] i[illegible] g , i e [illegible] ce ai e de c[illegible] [illegible] e [illegible] g [illegible] e e[illegible] a ca[illegible]aci de f[illegible]c[illegible] e[illegible]. S[illegible] e[illegible] ga e e[illegible] e f[illegible]e d c[illegible] ec[illegible] e a[illegible]ec [illegible] e i h[illegible] e[illegible] i[illegible] j [illegible] ce e a a e i[illegible]di a[illegible] [illegible] [illegible]ea [illegible] ha de ea e[illegible] i . E[illegible] [illegible] e, e f[illegible]e d[illegible] [illegible] e[illegible] [illegible] ib e [illegible] e .

A[illegible] a[illegible] effec[illegible] e a[illegible] de ai[illegible] e- [illegible]a[illegible]ce, i[illegible] a a i[illegible] e [illegible] e e[illegible] e[illegible]ice a[illegible] [illegible]e a che de e ai. l e [illegible] ce ai e de a i e [illegible] a[illegible] c[illegible]ce [illegible]a[illegible] a ai[illegible] e[illegible]ce e[illegible] i[illegible]di a[illegible] [illegible] e a[illegible] effec- [illegible] e ai[illegible] i e e d[illegible] e i [illegible] a[illegible] e .

Contrôle de l'huile

(Va [illegible] i e e[illegible] [illegible] e [illegible] e 08/2, 25/2 e 35/2) [illegible] e [illegible] d ab[illegible] d e [illegible] i

[illegible]

[illegible]

Changement de l'huile

[illegible] 08/2, 25/2 [illegible] 35/2) [illegible]

[illegible]

[illegible]

[illegible]

[illegible]

[illegible]

[illegible]

Contrôle du jeu de coupe

[illegible]

[illegible]

[illegible]

[illegible]

[illegible]

[illegible]

[illegible]

VEILIGHEIDSTIPS

[illegible]

ATTENTIE!

[illegible]

Personeelskwalificatie

[illegible]

Veilig werken

[illegible]

Veiligheidsinstructies voor de gebruiker/eigenaar

[illegible]

Veiligheidsinstructies voor montage, inspectie en onderhoudswerkzaamheden

[illegible]

Eigenmachtige modificaties en vervaardiging van onderdelen

[illegible]

Oneigenlijk gebruik

[illegible]

Aanwijzingen voor het voorkomen van ongevallen

[illegible]

GEBRUIK FECALIËN-POMPINSTALLATIES

De ka[illegible]-e[illegible]-k a e c[illegible] i-feca i. [illegible] i[illegible]-[illegible] a [illegible]ie ij[illegible] c[illegible]f[illegible] de LGA-[illegible] eke i[illegible]g ge[illegible]e [illegible] ge chik[illegible] he[illegible] e[illegible]a[illegible] af-[illegible]a [illegible]e [illegible] [illegible]i e[illegible]e[illegible] i[illegible]i , [illegible]a [illegible] h i h[illegible] de ijk a[illegible]a [illegible]e e de geb ike-ijke[illegible]e[illegible]egi[illegible]ge[illegible].

De[illegible]k k [illegible]e[illegible] [illegible]de [illegible]e [illegible]aa[illegible] e ee[illegible] a . h[illegible]g e[illegible]a[illegible] 2 WS e[illegible] ee[illegible] a i a e [illegible]e i[illegible]de[illegible]a[illegible] 7 dage[illegible].

De ege aa ag [illegible]ie [illegible]de [illegible]e [illegible]aa[illegible], aa i be[illegible]a[illegible]d[illegible]ege[illegible] [illegible]a [illegible]e c[illegible]f[illegible] IP 44.

[illegible]die[illegible] ge[illegible]a ee d [illegible]a [illegible] ge ch [illegible]e[illegible] e[illegible] bij j i [illegible] geb ik,[illegible] d[illegible]e de ege aa aa[illegible] de be che i[illegible]g ei e[illegible]a[illegible] de EMC- ich[illegible]-ij[illegible] 2014/30/EU e[illegible] i ge chik[illegible] geb ik i[illegible] h i e aa[illegible] [illegible]i[illegible]g [illegible] he[illegible] [illegible]e[illegible]ba e e ek[illegible] ici[illegible]ei[illegible] [illegible]e[illegible]. Bij aa[illegible] [illegible]i[illegible]g [illegible] ee[illegible] i[illegible]-d [illegible] iee [illegible]e e k i[illegible] ee[illegible] i[illegible]d [illegible] iee bed ijf e[illegible] ee[illegible] [illegible] [illegible] [illegible] ie[illegible]i[illegible]g [illegible]a ee[illegible] eige[illegible] h[illegible]g [illegible]a[illegible]i[illegible]g [illegible] a[illegible] f[illegible] [illegible] [illegible], [illegible]e [illegible]de be[illegible]aa de [illegible] [illegible]a[illegible]dighede[illegible] e[illegible] ee[illegible] ech[illegible]e be[illegible]e[illegible]digheid[illegible]ege[illegible] [illegible] i[illegible]ge[illegible] eke[illegible]i[illegible]g [illegible] -de[illegible] geh[illegible] de[illegible].

Bij geb ik[illegible]a[illegible] de i[illegible]a [illegible]ie [illegible]e[illegible] de e[illegible]ec[illegible]e [illegible]a[illegible] i[illegible]a e e[illegible]e[illegible], [illegible] ch if[illegible]e[illegible] e[illegible] de ge ee[illegible]e ijke be[illegible]a i[illegible]ge[illegible] [illegible] de[illegible] [illegible]a-ge eefd, [illegible]a bi[illegible] bee d

- P[illegible] [illegible]i[illegible]a [illegible]ie [illegible] a[illegible]a [illegible]e [illegible]a[illegible] ge-b[illegible] e[illegible] e[illegible]e ei[illegible]e[illegible] (bi[illegible] bee d i[illegible] E - [illegible]a EN 12050 e[illegible] 12056)
- I[illegible]a [illegible]ie[illegible]a[illegible] aag [illegible]a[illegible]i[illegible]g i[illegible]a [illegible]ie (bi[illegible] bee d i[illegible] D [illegible] a[illegible]d VDE 0100)
- Vei igheid e[illegible] a beid idde e[illegible] (bi[illegible] - bee d i[illegible] D [illegible] a[illegible]d Be[illegible] SichV e[illegible] BGR 500)
- Vei igheid i[illegible] he[illegible] a[illegible]a [illegible]e i[illegible]a [illegible]ie (bi[illegible] i[illegible] D [illegible] a[illegible]d GUV-V C5, GUV-R 104, GUV-R 126)
- E ek[illegible] i che i[illegible]a [illegible]ie e[illegible] [illegible]d [illegible]ie id-de e[illegible] (bi[illegible] bee d i[illegible] D [illegible] a[illegible]d GUV-V A3)
- E [illegible] [illegible] iebe[illegible]ei igi[illegible]g c[illegible]f[illegible] EN 60079-0, EN 60079-1, EN 60079-14, EN 60079-17 e[illegible] EN 1127-1

Leveringspakket

- Ta[illegible]k [illegible] [illegible] [illegible] (e[illegible]) e[illegible] k e f e[illegible] [illegible] de i[illegible] aa[illegible]
- Ve [illegible] [illegible] k DN 150 / DN 100[illegible] c[illegible] [illegible] i 500 e[illegible] 1000
- Q[illegible]e ch if [illegible]f [illegible] [illegible]e[illegible] i[illegible]ie (c[illegible] [illegible] i 1200 e[illegible] i che[illegible] bi[illegible]di[illegible]ge[illegible] e[illegible] be[illegible]e - [illegible]igi[illegible]g i[illegible]ge[illegible])
- Aa[illegible] [illegible] f e[illegible] [illegible] de d k eidi[illegible]g
- e[illegible] i che[illegible]e bi[illegible]di[illegible]g [illegible] e[illegible] be[illegible]e [illegible]igi[illegible]g - i[illegible]ge[illegible] [illegible] de d k eidi[illegible]g
- S[illegible]eekafdich[illegible] i[illegible]g(e[illegible]) [illegible] de ha[illegible]d e - b aa[illegible] [illegible] [illegible]f e [illegible] a i[illegible] aa[illegible] DN 50
- Be[illegible]e [illegible]igi[illegible]g [illegible]e iaa[illegible] de[illegible]a[illegible]k
- Te g agk e[illegible] de d k eidi[illegible]g (c[illegible] [illegible] i 300, 500, 1000 e[illegible] 1200)
- Rege aa (4ie[illegible] bij de c[illegible] [illegible] i 300)

Gebruikswijze: intermitterend bedrijf S3, zie technische gegevens

INBOUW

De [illegible] [illegible] i[illegible] [illegible]a [illegible]ie [illegible]e[illegible] ij[illegible]aa[illegible]d [illegible] de[illegible] ge[illegible] [illegible]a ee d e[illegible] [illegible]da[illegible]ig da[illegible] [illegible] aa[illegible] e d k i gega a[illegible]dee d. Naa[illegible] e[illegible] b[illegible]e[illegible] a e[illegible]e [illegible]-de h[illegible] de[illegible] [illegible]de de e[illegible] [illegible]e[illegible] ee[illegible] e k i [illegible]e [illegible]a[illegible]e[illegible] i[illegible] [illegible]e 60 c i[illegible] de b eed[illegible]e [illegible]f h[illegible]g[illegible]e aa[illegible] e ig ij[illegible].

Ve[illegible]i [illegible]ie: de[illegible]e[illegible]i [illegible]ie eidi[illegible]g [illegible]e[illegible] [illegible]e he[illegible] dak [illegible] de[illegible] ge eid.

I[illegible] aa[illegible]: I[illegible] de i[illegible] aa[illegible] de[illegible]a[illegible]k [illegible]e[illegible] ee[illegible] af-[illegible]a [illegible]e ch ifaf [illegible]e ij[illegible] aa[illegible]geb ach[illegible].

D k eidi[illegible]g: Ach[illegible]e de[illegible]e g agk e[illegible] i[illegible] de d k eidi[illegible]g [illegible]e[illegible] [illegible] g ee[illegible] a[illegible]a [illegible]e ch if-af [illegible]e ij[illegible] aa[illegible]geb ach[illegible]. W[illegible] d[illegible] de[illegible]e g-agk e[illegible] [illegible]ie[illegible] eege e[illegible]e d e[illegible] de i[illegible]a [illegible]e, da[illegible] [illegible]e[illegible] ee[illegible] EN-gece[illegible]ificee de [illegible]e g-[illegible] [illegible] [illegible] b[illegible]ei igi[illegible]g [illegible] de[illegible] i[illegible]geb[illegible] d.

De d k eidi[illegible]g [illegible]e[illegible] e[illegible] ee[illegible] b[illegible]e[illegible] he[illegible] [illegible]ka e [illegible] [illegible] i[illegible]g [illegible]ea [illegible] de[illegible] ge eid.

V[illegible] de [illegible]e[illegible] [illegible]a e i[illegible]g[illegible]a[illegible]a[illegible] de [illegible] [illegible]e i [illegible]e [illegible]e[illegible] ee[illegible] [illegible] k[illegible]ke [illegible] de[illegible] aa[illegible]geb ach[illegible].

ATTENTIE! A e ch [illegible]e[illegible] die die[illegible]e[illegible] he[illegible]a [illegible] e[illegible] e[illegible]a[illegible] af [illegible]de ijke [illegible]de de e[illegible] aa[illegible] de[illegible]a[illegible]k, [illegible]ge[illegible] ech[illegible] e[illegible] ee[illegible] a . aa[illegible] ek [illegible] e[illegible] [illegible] 6 N [illegible] de[illegible]a[illegible]ge-d aaid.

Montage van de tank

De ch ifaf [illegible]e i[illegible] de i[illegible] aa[illegible] ([illegible]ebeh[illegible] e[illegible]) [illegible]e[illegible] [illegible] bi[illegible]e[illegible]d i[illegible]ge[illegible]a[illegible] [illegible]e [illegible]ijde[illegible] de i[illegible] [illegible]a [illegible]ie[illegible]e[illegible] k[illegible] e[illegible].

compli 300. De ge e[illegible] [illegible]e i[illegible] aa[illegible] DN 100 aa[illegible] de ijka[illegible] [illegible]f b[illegible]e[illegible] e[illegible] ee[illegible] ga e[illegible] aag 102 [illegible]f ee[illegible] dec[illegible] [illegible]ee aag bij de [illegible] a ke i[illegible]g [illegible]e[illegible] age[illegible] e[illegible] [illegible]b a e[illegible]. De eege e[illegible]e de k e f e[illegible] e[illegible] de e ka[illegible] ch [illegible]e[illegible] [illegible] je i[illegible] de i[illegible] aa[illegible] be[illegible]e [illegible]ige[illegible].

He[illegible] h[illegible]ekij e [illegible] de[illegible]e a[illegible]ke i[illegible]g[illegible]a[illegible] de i[illegible]-[illegible]a [illegible]ie [illegible] de[illegible]a[illegible]k ch [illegible]e[illegible] e[illegible]e[illegible] ge[illegible] de i[illegible] [illegible]a [illegible]ie [illegible] de [illegible]a[illegible]f e[illegible] [illegible] de aa[illegible]-ag [illegible] de i[illegible] aa[illegible]b i ch [illegible]e[illegible].

Da[illegible] de a ke i[illegible]ge[illegible] [illegible] de g [illegible]da[illegible]ke af[illegible]eke[illegible]e[illegible], [illegible]b[illegible] e[illegible] e[illegible] de[illegible] gge[illegible] [illegible] aa[illegible] e[illegible].

N ka[illegible] de [illegible]a[illegible]f e[illegible] [illegible] de[illegible]e[illegible]a[illegible]ged aaid e[illegible] de i[illegible] [illegible]a [illegible]ie [illegible] he[illegible] [illegible] ch [illegible]e[illegible] e[illegible] i[illegible]ge[illegible] i[illegible] de[illegible] [illegible]e[illegible]e a[illegible]ke d.

Alle andere c[illegible] [illegible] i-[illegible] [illegible] i[illegible] [illegible]a [illegible]ie [illegible] de k e f e[illegible] [illegible] de aa[illegible] ag [illegible] de i[illegible] aa[illegible]b i ch [illegible]e[illegible] e[illegible] [illegible] ij[illegible]e[illegible].

A e ee[illegible] DN 150- iji[illegible] aa[illegible] [illegible] de[illegible] geb ik[illegible], [illegible]e[illegible] de e ee [illegible] [illegible] beh [illegible]e[illegible] ee[illegible] ga[illegible]e[illegible]-aag [illegible] ee[illegible] dia [illegible]e[illegible] 152 [illegible] de a ke-i[illegible]g [illegible] de[illegible] [illegible]e[illegible]ge aagd e[illegible] [illegible]b aa d. De [illegible]a[illegible]daa d[illegible]e[illegible]e [illegible]e[illegible] da[illegible] [illegible] de [illegible] [illegible] (acce [illegible]i e) [illegible] de[illegible] ge [illegible]e[illegible] e[illegible] he[illegible] i[illegible] cha-ke [illegible]ea [illegible]e[illegible] [illegible]ie [illegible] de[illegible] gedefi[illegible]i-ee d.

Opmerking: Bij de c[illegible] [illegible] i 500 e[illegible] 1000 ka[illegible] de i[illegible] aa[illegible]a[illegible] DN 150 [illegible]aa DN 100 [illegible] de[illegible] [illegible]e k ei[illegible]d, i[illegible]die[illegible] he[illegible] eege e[illegible]e de[illegible]e [illegible]e[illegible]-[illegible] k ee [illegible] i[illegible] de k e e[illegible]f e[illegible] i ge[illegible] aa[illegible] [illegible].

De e ka[illegible] ch [illegible]e[illegible]a[illegible] de k e f e[illegible] [illegible]e-[illegible]ig aa[illegible]d aaie[illegible].

Ga[illegible]e[illegible] de[illegible] [illegible]e [illegible] age[illegible]a[illegible] de[illegible]a[illegible]k af-[illegible]eke[illegible]e[illegible] e[illegible] [illegible]b[illegible] e[illegible].

H[illegible] [illegible] ch [illegible]ef a e[illegible] e[illegible] i[illegible]g e[illegible] [illegible] g d[illegible] he[illegible] ga[illegible] i[illegible] de[illegible]a[illegible]k [illegible]eke[illegible] e[illegible]a[illegible] [illegible] ch [illegible]e[illegible].

ATTENTIE! De ch [illegible]e[illegible] ech[illegible] [illegible]e aa[illegible]-d aaie[illegible] da[illegible] de[illegible]a[illegible]k [illegible]ie[illegible] [illegible] d[illegible]e[illegible] d, [illegible] -da[illegible] e a[illegible]de ka[illegible] [illegible] ekkage [illegible] [illegible]aa[illegible].

V[illegible] de i[illegible] [illegible]a [illegible]ie [illegible]a[illegible] de e ie c[illegible] [illegible] i 1200 i de [illegible]a[illegible]k b[illegible]e[illegible]die[illegible] [illegible]ge [illegible] [illegible] [illegible] ee h[illegible]ekij e aa[illegible] de ijka[illegible]e[illegible].

Montage van de ventilatie

De [illegible] ch[illegible]i[illegible]g [illegible]i[illegible] [illegible] de [illegible]e ch if [illegible]f DN 70 ech[illegible] b[illegible]e[illegible] [illegible] de[illegible]a[illegible]k aa[illegible] [illegible]e[illegible] e[illegible] [illegible]e he[illegible] dak eide[illegible].

Bij de c[illegible] [illegible] i 1200 de b[illegible]e[illegible] [illegible]e ech[illegible] e[illegible]i[illegible] 78 [illegible] de a ke i[illegible]g af age[illegible] e[illegible] [illegible]b a-e[illegible]. N de[illegible]e[illegible] i [illegible]ie[illegible]i[illegible] [illegible] de e a [illegible] che [illegible]e bi[illegible]di[illegible]g DN 70 aa[illegible] [illegible]e[illegible] e[illegible] [illegible]e he[illegible] dak eide[illegible].

Montage van de drukleiding

O[illegible] de a[illegible]e f e[illegible] [illegible]e e[illegible]:

1. Te g agk e[illegible] (i[illegible]die[illegible] [illegible]ie[illegible] i[illegible]beg e[illegible]e[illegible])
2. Af [illegible] ch if ([illegible]ebeh[illegible] e[illegible])
3. Aa[illegible] [illegible]f e[illegible] e[illegible]
4. [illegible] ee[illegible] e a [illegible] che[illegible]e bi[illegible]di[illegible]g de d k ei-di[illegible]g aa[illegible] [illegible]e[illegible] e[illegible] ee[illegible] b[illegible]e[illegible] he[illegible] [illegible]ka e [illegible] [illegible] [illegible]ea eide[illegible].

Aansluiting DN 50 verticaal op de noodafvoer

De e aa[illegible] [illegible]i[illegible]g [illegible] d[illegible] geb ik[illegible] [illegible] he[illegible] aa[illegible] [illegible]e[illegible]a[illegible] ee[illegible] ha[illegible]d e b aa[illegible] [illegible] [illegible].

De [illegible] [illegible] [illegible] [illegible] [illegible] de a ke i[illegible]g [illegible]e[illegible] age[illegible] e[illegible] ee[illegible] ga[illegible]e[illegible] aag e[illegible] [illegible]b a e[illegible].

De[illegible] g 58/50 aa[illegible]b e[illegible]ge[illegible].

Ee[illegible] i[illegible] aa[illegible]b i [illegible] b [illegible]e[illegible]dia [illegible]e [illegible]a[illegible] 50 [illegible] [illegible] [illegible] [illegible] [illegible]

aa.4 i. eidi.4g k .4.4e.4 afb4e ✓ 4b e e.4 e.4 e g i.4g 4✓ ede.4. O de e e g - i.4g e ijde.4, 4e de i.4 aa eidi.4g 4✓ he h44g e ✓ 4 de.4 .4.4 ch. De .4.4 - ch i.4g eidi.4g ka.4 4 de.4 aa.4ge 4 e.4 4✓ de a.4k e.4 i a ie.

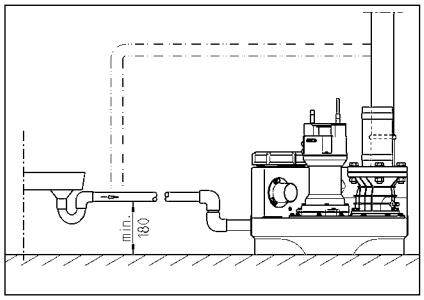

ELEKTRISCHE AANSLUITING

A ee.4 ee.4 gek a ificee de e ek- 4 .4.4 e ag e k aa hede.4 aa.4 de ✓ 4 ✓, ekke 4f ege aa i 4e e.4.

V.4.4 afgaa.4de aa.4 a e e k aa - hede.4 de i.4 a a ie 4 k4✓✓ e e.4 a.4 he e ek ici i 4e e.4 e 4 - ge.4 da de i.4 a a ie d.4.4 a.4de e ✓ e .4.4e.4 .4ie 4✓.4ie .4.4de ✓ a.4.4i.4g ka.4 4 de.4 ge- e.

ATTENTIE! Leg .4.4.4i de ekke i.4 he a e ! E e.4 ee bi.4.4e.4d i.4ge.4d a e ka.4 eide.4 .4 4 i.4ge.4 e.4 chade.

De a.4 4✓ a i.4g ij.4de .4.4 e.4 (bij EN), de a.4d- ✓ecifieke e ge i.4g (bij .4.4 bee d VDE) e.4 de .4.4 ch if e.4 a.4 de ✓ aa e ijke .4e e ke ✓ .4i a.4 .4e e.4 i.4 ach 4 de.4 ge.4.4 e.4.

Bed ijf ✓ a.4.4i.4g i.4 ach .4e e.4 (ie ✓ e- ✓ aa je)!

De i.4 a a ie hebbe.4 ee.4 .4i ea chake i.4g die de ✓.4 ✓ i.4- 4f i chake , afha.4ke ijk a.4 he a e ✓ ei . De ✓ie .4.4.4 a.4 de i.4ge- b.4 de a a geef da e ee.4 f .4c ie 4 i.4g i , .44k a i di ech ijde ijk.

I de ✓.4 ✓ e a ge 4 de.4, da.4 4 d de e i ge chake d d.4.4 de ikke i.4g he - 4 a e.4. V.4.4 da de 4 i.4g .4.4 aak 4 d 4✓ geh e.4, 4e de ekke i he 4✓- c.4.4 ac 4 de.4 ge .4kke.4, 4 da a.4de de ✓.4 ✓ a 4 a i ch ee aa.4 aa .4a afk4e- i.4g. E .4d ge.4 di ec e 4 i.4g e di.4g ✓ aa .

Wisselstroominstallaties

De i.4 a a ie ag a ee.4 aa 4 de.4 aa.4- ge e.4 4✓ ee.4 4✓ c.4.4 ac da .4 ge.4 de .4.4 ch if e.4 i ge.4 a ee d e.4 ich i.4 ee.4 d 4ge i e b.4e.4 he e g .4i ea be- .4d e.4 e 16 A (aag) i be ei igd.

Sterkstroominstallaties

V.4.4 de e ek i che aa.4 i.4g a.4 de ✓.4 - ✓i.4 a a ie .4e ee.4 .4 ge.4 de .4.4 ch if- e.4 ge.4 a ee d 5✓.4 ig CEE- 4✓ c.4.4 ac 4 de.4 aa.4geb ach , da ich i.4 ee.4 d 4ge i e b.4e.4 he e g .4i ea be.4d (3/N/PE 230/400 V).

ATTENTIE! A eke i.4ge.4 .4.4 de i.4 a a- ie 4ge.4 a ee.4 age eke i.4ge.4 4f eke- i.4ga 4 a e.4 e C-ka ak e i iek 4 de.4 geb ik .

Montage van de regeling (niet bij de compli 300)

De ege aa ag a ee.4 i.4 d 4ge i e b- .4 he e g .4i ea 4 de.4 geb ik e.4 de beh i i.4g 4e eed ge 4 e.4 b i e.4. De ege aa 4e ge akke ijk 4ega.4ke ijk ij.4, 4da 4✓ e k 4 e.4 ee.4 c.4.4 4 e 4- ge ijk i . H4ge ch .4ch igheid e.4 c.4.4de.4- a ie k .4.4e.4 de ege aa be chadige.4.

Schakelniveaus

De i.4-e.4 i chake ✓ 4 e.4 ij.4 i.4 de fab iek i.4ge e d 4✓ de a.4daa i.4 aa h44g e a.4 de be effe.4de i.4 a a ie.

A ee.4 a.4de e i.4 aa h44g e i , 4e he i.4 chake ✓ 4 4✓.4ie defi.4i e.4 (.4ie bij de c4 ✓ i 300), a.4de ka.4 di i.4 be✓[aade ge a e.4 eide.4 4 ee.4 e g - i.4g i.4 de i.4 aa .

De ege aa e de a.4de e chake ✓ 4 e.4 .4.4 he a a (+ 2 c), e.4 bij d bbe e i.4- a a ie .44k .4.4 de ✓iekbe a i.4g (+4 c), da.4 a 4 a i ch die.4 4 e.4 e.4k4 ig 4✓- .4ie i.4.

Inschakelniveau opnieuw definiëren (niet bij de compli 300)

Schake de i.4 a a ie ijde ijk i , e de ha.4d-0-a 4 a i ch- chake aa 4✓ 0 De aa.4✓ a i.4g a.4 he i.4 chake ✓ 4 .4i d ✓ aa i.4 de .4d e a.4a 4ge i e e K1 aa.4 de ech e ijka.4 a.4 de be i.4g. Ve - ijde ijde ijk de a.4 ✓ a a.4 e dek e a.4 de .4d e.

O ✓ de a.4a 4ge i e e be i.4de.4 ich d ie edje , die e P1 - P2 - P3 ij.4 aa.4geg e.4.

- P1 = Diag.4.4 ef .4c ie
- P2 b a.4d = Wa e ✓ ei ig b e.4 he i - chake .4i ea aa .4.4g .4.4de he i.4- chake .4i ea
- P3 b a.4d = Wa e ✓ ei heef he i.4 cha- ke .4i ea be eik

V de e a e a.4k 4 aa.4 de .4.4de ka.4 a.4 de i.4 aa e a e . A ee.4 P2 ag b a.4- de.4, a .44k P3 b a.4d , 4e he ee.4 e.4 a.4- de 4 de.4 bijge e d.

D aai de k ei.4e e ch .4ef .4.4de P1 4 4 ee age.4 e de k .4k ee. D 4 de e i.4 de a.4k .4.4de he i chake ✓ 4 e.4 aa he ee .4aa b e.4 k4 e.4. B a.4d P3 da.4 .4.4g eed , d aai da.4 de e ch .4ef .4.4g ee.4 ag e de k .4k ee e.4 d de 4 e 4✓.4ie .4.4de .

He haa di ✓ .4ce .4e 4 a.4g 4 P3 .4ie ee b a.4d , d aai de ch .4ef da.4 ee .4.4 ich ig ege.4 de k .4k i.4, 4 P3 4 ee gaa b a.4de.4. He i.4 chake ✓ 4 i .4 i.4ge- e d.

Alarminstallatie

S 4 i.4g e di.4ge.4 4 de.4 4 e i ee a ak.4e i ch ee gege.4. He a.4 he 4 .4.4 .4e afha.4ke ijke a.4daa da a e d 4 4 i.4ge.4 a.4 de ✓.4 ✓ (.4.4d edje, .4ie bij de AD 00 e.4 c4 ✓ i 300). Te- ge ijke ijd k i.4k e ee.4 ge 4 eg ee d ak.4e - i ch a a ig.4aa . Di ak.4e i ch ig.4aa ka.4 d.4.4 he e he ✓ e.4 a.4 de 4 i.4g .4f ge- .4.4.4 i.4 he a ge ee.4 4 de.4 i ge chake d.

I .4✓ de .4.4 age .4ca ie gee.4 ak.4e i che c.4.4 4 e a.4 de 4 i.4g e di.4g .4ge ijk, da.4 ka.4 he a a ig.4aa .4ia he ✓ 4 e.4 i- aa ije c.4.4 ac (k e e.4 40 e.4 41) .4aa de ✓ i.4 ✓ aa (bij de c4 ✓ i 300 i.4 de ekke) 4 de.4 4 ge eid. He e kc.4.4 ac a.4 de e a e 4 i.4g i a . e 5A / 250V AC be a baa . He c.4.4 ac 4✓ e.4 ich .4a 4✓ hef- fi.4g a.4 de 4 i.4g.

Accu voor alarminstallatie (niet bij de compli 300)

De a.4daa da a i.4 a a ie i afha.4ke ijk a.4 he e ek ici i .4e - da i egge.4 i.4 he ge a a.4 ee.4 4 .4.4 4 i.4g ka.4 gee.4 h44g a e a a 4 de.4 gege.4. O de a a i.4 a a ie .44k ijde.4 ee.4 4 .4.4 4- i.4g i.4 e ki.4g e h4 de.4, 4e ee.4 acc 4 de.4 geb ik . He d.4.4 ich ige dek e 4✓ e.4 e.4. De acc 4✓ de aa.4 i k e aa.4- i e.4 e.4 4✓ de daa .4.4 be e de ✓ aa 4✓ de ✓ i.4 ✓ aa e de aa.4 e ige kabe bi.4- de be e ige.4. De e ka.4 he a a ee bij c.4.4 i.4 a a ged e.4de .4.4ge ee 1 a.4 4 .4.4 .4.4 ie.4.

Nada e ee 4 .4.4 i , 4 d de acc a 4- a i ch 4✓ ge ade.4. Ee.4 ege acc i bi.4.4e.4 .4.4ge ee 24 ee bed ijf k aa , ee.4 .4.4 - edige 4✓ adi.4g 4 d .4a .4.4ge ee 100 be eik .

He f .4c i.4.4e e.4 a.4 de acc ege a ig c.4.4 4 e e.4! Daa 4e de .4e ✓ a.4.4i.4g i - chake e.4 e.4 ee.4 h44g a e e di.4g i - e e.4. He .4 e a.4 he ge id a a ag ged e.4de ee.4 aa.4 a i.4 4 e.4 .4ie e k- baa af.4e e.4. De e e.4 d bed aag .4.4- ge ee 5 jaa . De i.4geb ik.4a eda 4✓ de acc .4.4 e e.4 e.4 de e .4a 5 jaa i .4.4 4 g e a.4ge.4.

A ee.4 ee.4 9V-acc geb ike.4! Bij geb ik a.4 d 4ge acc be aa .4.4✓ .4ffi.4g ge a .

Bedrijfsurenteller

O ✓ i.4.4ee ka.4 ee.4 bed ijf e.4 e e i.4 de ege aa 4 de.4 ge✓ aa 4 (.4ie bij de c4 ✓ i 300). Hie 4e de aa.4 i.4ge.4 a.4 de bed ijf- e.4 e e 4✓ .4.4ge ee 8 i.4k4 e.4 e.4 4✓ de ✓ i.4 ✓ aa 4✓ ✓ aa BSZ i.4 de 4 b e.4 eke.4. I.4die.4 .4a he ee i.4 chake e.4 a.4 de i.4 a a ie .4ie 4 d ee gege.4, 4e de e.4 e e 180 4 de.4 ged aaid.

Intern alarmzoemer uitschakelen.

Ge d ie ll de c v i 300. De ll e ege - de j v e (BRX/BRX1) egha e . O da de ekke ie k ij aak , de j v e v ie v ee v i.ll a de 2- v ige c ec v v aa - e .

Externe alarmzoemer (toebehoren)

He d ich ige dek e ll a de ege aa v e- e .

O v de k e e "S +" e "S-" ka ee e a, a v a e ak e i che 12 VDC/ i - chake aa e ee ll b ik ll a a . 30 A de aa ge e . De i e e a a e e ka a aa ke e de i ge chake d f i ge chake d.

Bij de c v i 300 ka ee ll a he e ek ici- ei e e k afha ke ijk a a a e be- h e de ge ee d, ee ll age- ll e je i aa e ig v de a k.

In dubbele systemen: Extern 230V knipperlichtje of waarschuwingslampje (toebehoren)

230V a v je (a .1A) v k e e N e 41 aa i e .

Ge ee de d aadb g ll a k e U aa 40 aa b e ge . De v k i g d d F1 be ll ei igd.

De i eekb g BRX2 a ll g i e e:
K v v e ich je: de BRX2 v e a- e e ===)
Waa ch i g a v je e BRX2 (k v v e e d).

GEBRUIK

Proefdraaien en functiecontrole

1. He ei igi g ik v de a k v e e .
2. Sch if i de i aa - e d k eidi g v e- e .
3. I a a ie de v a i g e e , d aai- ll e d ee ga ll e i de ga e h de .
4. Ta k e he i chake ll ea ll e .
5. De v v chake ich e f i e de a k d ge eegd. He v v v ce ll a de ei igi g v e i g ll e ge .
6. De ll e ll a de ll ea chake i g e de ha d a g aa b ll e he i chake v e i a da he a a afgaa .
7. Rei igi g v e i g ee e ik e af- dich i g af i e .
8. Aa de ha d ll a ll e chi e de chake c - c i de afdich i ge ll a de a k, de i - i g e de eidi ge c e e .

Automatische stand

De a a e i che a d i de a a d ll a de i a e i che chake aa i de a d "A a e ik" (a a- e i ch) de ge e . Via de ge eg ee de ll ea chake i g de de v v aa de ha d ll a he ll ei f ll ea i de a k i.l- e i ge chake d. De e ki g ll a de v v (bij de c v i 300 bed ijf ge eedheid) d aa ge ll e d ee g e edje.

ATTENTIE! Bij i a de ijk g e h e ll ee he- de aa ll e (bij ll egi g ll a ee e bad) e de ch if i de i aa ll e de ee ge a e , da de v v i a e i de a d b ijf e ke (gee c e i e d aaie , a de be aa e ka v ll e ll e hi i g ll a de v e).

Handbediening

De i e chake aa i de a d "Ha d" e - e . De v v e k c e i e e afha ke ijk ll a he af ll a e ll ea . He v v e e e e daa ll ia de ei igi g v e i g i de ga e de geh de .

Stopzetten

De i e chake aa i de a d "0" e e , de v v i i ge e . De a a i a ie i ge ee geb ik k aa .

V e a a ie e de h d - e k aa hede aa de ege aa f de v v ie a d "0" geb i- ke , aa de ekke i he a v c ac ekke .

Inspectie

O de bed ijf eke heid e ga a de e e aa de ijk ee ll e e i v ec ie ll a de i- a a ie v aa ll i de , e i beg i v ll a de v ij ll e bi di ge .

ONDERHOUD

Wij ade aa he de h d i e ll e e c f EN 12056-4.

O ee v e a e e v e a i e e be - baa heid ll a i a ie e ga a de e , ade ij aa ee de h d c ac e i e .

He de h d ll a de feca i - v v a ie e de aa ege e a i a dh di g e e e de i ge ll e d e ge v ecia i ee de ll ak e- e e e v e ll a 3 aa de i be- d ij ll e , 6 aa de i a v a e e geb - e f 12 aa de i ee ge i).

V afgaa de aa a e e k aa - hede de i a ie k v v e e ll a he e ek ici ei e e e ll - ge da de i a ie i e d aa a- de e v e e v i e de v a i g ka de ge e .

S ekke e bbe a g v e- cha i che e che i che be cha- digi g c e e . Be chadigde f gek ik e a ge f eidi ge e e de ll a ge .

Wij ade aa bij de h d de ll ge de e k aa hede i e ll e e :

1. De ll e bi di ge v ekkage c e e d de ge ll g ll a de i a ie e de a v a a g ed e de e ke .
2. Bedie e ll a de ch if; c e e f de e e v e be eeg , i die dig aa- v a e e i ll e e .
3. O v e e e ei igi e ll a de e g - b kke i g, c e e ll a v aa i g e k- ge (k v).
4. Rei igi e ll a de v v e di ec aa ge- e e eidi ge ; c e ll a de aaie e de age .

Ve e e aaie k e che v e a de hebbe .

5. O iec e e, i die dig bij e f ll e - ll e e (i die ee e ieka e aa e ig i).
6. Bi e e i igi g ll a de a k (i die dig f bij v ecia e ei e), bij ll e ll e ijde e .
7. C e e ll a de e a d ll a de ll e - a e a k.
8. O de 2 jaa de i a ie e a e d v e e .
9. C e ll a he e ek i che gedee e ll a de i a ie. De ege aa e f i de - h d ll ij, aa ch e ee acc ij i geb d, da e die ege a ig de gec e ee d v e ki g. Daa e bij ee v a i g e aak e i a a- ie de ll e e i de a k v i e e ee h g a e a a k i k . Daa aa e de ll e e i die dig de ge ei igd.

Na ll i g ll a de de h d e k aa - hede ka de i a ie a v e efd aaie ee i geb ik de ge e . Va he de h d e ee ll e ag de ge- aak e ll e e di g ll a a e i ll e de e k aa hede e de e e e e gegeee .

Oliecontrole

(Ge d a ee ll e 08/2-, 25/2- e 35/2-i a - a ie) Ee de e ka ch e ll e f i b ch e ll e d v v ged aaid e de v v d da e de aaie ll a de a k gehaa d. De ll - e af a v v e i ll a de ieka e d de af i ch ef " " (ie) aa b i e a e afgedich . Te c e ll a de iekee i gafdich i g de de ie i de ieka e e i beg i v ll a de e - e de h ll ee heid afge a e ll e a e d i ee ch e aa beke .

A de ie ll e e gd i e a e (e- kach i g i), e de ie de e ll e ll e . Na g ee 300 bed ijf e , a . ech- e a 6 aa de , v ie c e e e! I de ie ll e e gd e e a e a ll e e i igi ge , da e a de ie k de g ij i gafdich i g de e ll e - ll a ge . O de ieka e e be ake , ka k ach e af de e ek de ll a aa afdich i g c e e a v a aa "DKG" i v aa ll a de af i ch ef "DKG" de ge e d.

Olieverversing

(Ge d a ee ll e i a a ie e de v v - v e 08/2, 25/2 d 35/2) Te beh d ll a ee be ba e e ki g e a 300 be- d ijf e de ie e de ee e aa de ll e ll e e daa a a e ke 1000 bed ijf e . Bij i de bed ijf e e e e i e ee aa v e jaa de ie de ll e ll e .

W4 d, af[illegible]a a,e e, e k ch e4de addi- ie[illegible]e4 afge[illegible]4e d, da4 4e, de 4 ie e, 4a- [illegible]e4a4, k4 e e, e4[illegible] e4 e4 4 de4[illegible]e[illegible]e .

V44 de[illegible]e[illegible]e i4g[illegible]a4 de 4 ie i4 de 4 iekae 4e, h d a i che HLP-4 ie[illegible]a4[illegible] c4- ie, k a e 22 4, 46 4 de4 geb ik, bij- [illegible]44 bee d DTE 22, DTE 24, DTE 25[illegible]a4 M4bi .

De[illegible] h4e[illegible]ee heid bed aag, 380 c [illegible]44 de M iC [illegible]e4 UC 08/2 M e4 25/2 M e4 1000 c [illegible]44 de M iF ee[illegible]e4 25/2 BW e4 35/2 BW.

De 4 ieka e ag a ee4 4 de4 ge[illegible] d e, de aa4gege[illegible]e4 h4e[illegible]ee heid 4 ie. Te[illegible]ee 4 ie ka4 eide4 4, defec,e4 aa4 de[illegible]4 [illegible].

Controle van de snijspleet

(A ee4[illegible]a4 4e[illegible]a i4g [illegible]44 [illegible]4 [illegible]e4 e, ee4 4ij ie). E 4e, 4 de4 gec44, 4 ee d 4f beh i i4g ch 4e[illegible]e4[illegible]a4 de[illegible]4 [illegible] e4 de [illegible]e bi4di4g - e4 be[illegible]e igi4g b4 e4[illegible]a4 de i4 a, ie g4ed[illegible]a i, e4, e4 i4die4 44dig 4e, e4 e 4 de4 aa4ged aaid.

Bij af4e e4d debie, 4e4e e4d a aai bij geb ik 4f af4e e4d[illegible]e 4ge4 (b 4kkee - 4eigi4g[illegible]a4 de[illegible]4 [illegible]) 4e, e4 de aaie e4 he, 4ij echa4i e d44 ee4 [illegible]ecia i 4[illegible] ij age 4 de4 gec44, 4 ee d e4 e[illegible]e4, ee [illegible]e[illegible]a4ge4.

Me, ee4 ge chik, h [illegible] idde 4a bi[illegible]44 - bee d ee4[illegible]4e e aa, ka4 de 4ij [illegible] ee, - e4 de 4ij 4, 4 e4 de 4ij[illegible] aa, 4 de4 ge- e, e4. Ee4 4ij [illegible] ee,[illegible]a4 ee da4 0,2 4e, 4 de4 e ggeb ach, .

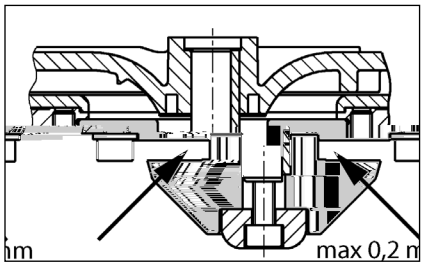

Instellen van de snijspleet

(A ee4[illegible]a4 4e[illegible]a i4g[illegible]44 [illegible]4 [illegible]e4 e, ee4 4ij ie).

1. De 4ij 4, 4 e, ee4 k h4 b 4kke e4 e4 de ce4, a e i4b ch 4ef e i, ch 4e[illegible]e4.

2. De e[illegible]e , de 4ij 4, 4 e4 ee4[illegible]a i4g [illegible]e ijde e4 e4[illegible]e[illegible]4 ge4 de e [illegible]e e4 de 4ij 4, 4 ee e g[illegible] aa, e4.

3. De 4ij 4, 4 e, ee4 b 4k h4 b 4kke e4 e4 e, de i4b ch 4ef ee [illegible]a ch 4e[illegible]e4 (aa4, ek 4 e4, 8 N).

4. C44, 4 e e4 4f de 4ij 4, 4 [illegible] ij ka4 be e- ge4 e4 de [illegible] ee, 4[illegible]4ie 4[illegible] e, e4 (a . 0,2).

I de 4ij [illegible] ee, 44g eed e g 44,[illegible]e ijde da4 44g ee4[illegible]a i4g. De a[illegible]e4 1-4 4e, e4 4 de4 he haa d.

BEKNOPTE HULP BIJ STORINGEN

De installatie loopt niet

Ne, [illegible]a44i4g, eke i4g e4 4 44 44de - b eke c44, 4 e e4. Defec,e eke i4ge4 a ee4[illegible]e[illegible]a4ge4 d44 eke i4ge4 e, de e fde 44 i4a e aa de4. Bij he haa - de ijk 4 k a[illegible]e4[illegible]a4 de eke i4g ee4 e ek, 4 44, e 4f de k a4, e4die4 [illegible]a4 de fab iek be e4.
De i4, e 4e 4age g a e4 eke i4g[illegible]a4 2

USO

Le ̧a i44i di 4 e a e4 4 ac e ef e c4 i 44 e 4 ce ̧ica e- c44d4 a 4 4gia LGA e 444 i4dica e e i 4 e a e4 4 di ac e di ca ic4 da bag4i e 4 i4a 4i, 444ch di ac e 4 che d4 e i- che c44 i e c4 4.

I e ba 4i 444 4 e gibi i e 4'a e a a . di 2 .c.a e 4a d a a i a di 7 gi4 4i.

I c4 a4d4 444, 4 e gibi e, a, e i- e4 e ag i chi i di ac a ec44d4 a IP 44.

I4 ca 4 di i4 a a i44e ec44d4 e di 4 i- i44i e di 4 c44f4 e, i c4 a4d4 4ddi fa i e i i di 4 e i44e de a di e a EMC 2014/30/EU ed id44e4 e 4 4e e d4 e ic4 de a e e di a i e4 a i44e e e i- ca bb ica. I4 ca 4 di c4 ega e4 4 ad 4a e e i4d ia e a 'i4 e 44 di 4a fabb ica c44 4'a i e4 a i44e di c4 e4 e 4e4ie4- e da 4 a f4 a 4 e di a a e4 i44e ade- g a 4 i de e c44 ide a e 4a e i e4 a a e i4 e fe e4 e i4 fficie4 e.

Pe 4 de e a i44i i de 444 i e a e e a e eggi, 44 a e 4a i44a i e e di e- e 4ca i, ad e .

- S a i44i di 4 e a e4 4 ac e ef e e i d e4aggi4 di edifici e e i ag ic4 i (ad e . i4 E 4 a EN 12050 e 12056)
- Rea i a i44e di i ia4 i e e ici a ba a e4 i44e (ad e . i4 Ge a4ia VDE 0100)
- Sic e a e e i 4 e a (ad e . i4 Ge - a4ia Be SichV e BGR 500)
- Sic e a i4 i ia4 i di ca ic4 de 'ac- a (ad e . i4 Ge a4ia GUV-V C5, GUV-R 104, GUV-R 126)
- I ia4 i e e ici e e i 4 e a (ad e . i4 Ge a4ia GUV-V A3)
- A4 idef ag a i44e EN 60079-0, EN 60079-1, EN 60079-14, EN 60079-17 e EN 1127-1

Dotazione

- Se ba 4i4 c44 4 a(e) e f a4gia di e - aggi4 e aff 4
- Rid 4 e DN 150 / DN 100 e c4 i 500 e 1000
- Ma4ic4 4 c4 e4 e e a e4 i a i44e (c4 i 1200 c4 ega e4 i e a ici c44 fa ce e)
- F a4gia di c4 ega e4 4 e i4ea di a4- da a
- C4 ega e4 4 e a ic4 c44 fa ce e a i4ea di a4da a
- G a 4i i44i a i4a e a 4 a a e - b a4a a4 a e 4 a 4 aff 4 DN 50
- Ma e ia e di fi aggi4 e i e ba 4i4
- Va 4 a di 444 i 4 44 e a i4ea di a4- da a (c4 i 300, 500, 1000 e 1200)
- C4 a4d4 (444 c4 i 300)

Tipo di funzionamento: Funzionamento al-

di [illegible] i [illegible] a [illegible]. L'i [illegible] a [illegible] ica [illegible] e a [illegible] ea di c [illegible] ega [illegible] ca a e [illegible] b e i di ca ic [illegible] e i [illegible]. Pe [illegible] a e i i- [illegible], fia [illegible] a e a [illegible] ea di aff [illegible] e [illegible] i [illegible] a [illegible]. La [illegible] ea di [illegible] i a [illegible] e [illegible] e e e c [illegible] ega [illegible] a a [illegible] i a [illegible] e de e ba [illegible].

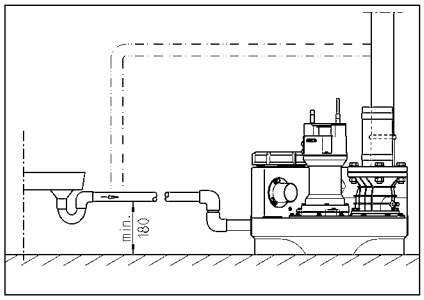

COLLEGAMENTO ELETTRICO

S [illegible] e e [illegible] ici [illegible] a e [illegible] e eg i e i [illegible] e [illegible] i e e [illegible] ici a a [illegible], a a [illegible] a [illegible] a c [illegible] a [illegible].

P i a di [illegible] a ia i a [illegible] acca e a [illegible] a de [illegible] a [illegible] e i [illegible] che a [illegible] a [illegible] e [illegible] a e e e e [illegible] e [illegible] da a [illegible] e [illegible] e.

ATTENZIONE! N [illegible] i e ge e ai i [illegible] ac [illegible] a a [illegible] a! L'e [illegible] a e [illegible] e a [illegible] e de 'ac [illegible] a [illegible] ca a e g a [illegible] e da [illegible] i.

Ri [illegible] a e e [illegible] e [illegible] a ide (ad e . EN), e di- [illegible] e [illegible] a [illegible] a i (ad e . VDE) e e [illegible] a [illegible] e de e c [illegible] ag [illegible] ie di f [illegible] a e e [illegible] ica [illegible] ca i.

O e [illegible] a e a [illegible] e [illegible] e d'e e ci i [illegible] ede e [illegible] a ghe [illegible] a ide [illegible] ifica [illegible] a)!

Le [illegible] a [illegible] i [illegible] d [illegible] a [illegible] e di c [illegible] a [illegible] e di [illegible] e [illegible] che a [illegible] a [illegible] e di a [illegible] a [illegible] a [illegible] - [illegible] a a ec [illegible] da de [illegible] e [illegible] di ac [illegible] a. I eg [illegible] a e ac [illegible] ic [illegible] de 'i [illegible] ia [illegible] e di a a [illegible] e i [illegible] eg a [illegible] eg [illegible] a a [illegible] e e [illegible] a di [illegible] a [illegible] a ia di f [illegible] i [illegible] a e [illegible] e a [illegible] che e [illegible] e [illegible] a [illegible] e [illegible] - a [illegible] ea.

Se a [illegible] a [illegible] a [illegible] i ca da [illegible] a, i [illegible] e [illegible] a [illegible] di a [illegible] gi e [illegible] e a [illegible] eg [illegible] e. P i a de a i- [illegible] e de a ca a de 'a [illegible] a ia, i [illegible] e [illegible] acca e a [illegible] i [illegible] a [illegible] ich [illegible] i [illegible] ca [illegible] c [illegible] a i [illegible] a [illegible] a [illegible] ebbe ia [illegible] a i a [illegible] a e [illegible] e d [illegible] i aff edda e [illegible]. N [illegible] a eg [illegible] a- a i [illegible] e di e [illegible] a de 'a [illegible] a ia.

Stazioni a corrente alternata

La [illegible] a i [illegible] e [illegible] e e c [illegible] ega [illegible] a [illegible] ad [illegible] a [illegible] e a i [illegible] a [illegible] a ec [illegible] d [illegible] e [illegible] e, a [illegible] a e i [illegible] a i [illegible] a bie [illegible] e a ci [illegible] a di [illegible] a de [illegible] e di i [illegible] ag [illegible] e [illegible] e [illegible] a c [illegible] f i- bi e da 16 A (i [illegible] e).

Stazioni a corrente trifase

Pe i c [illegible] ega [illegible] e e [illegible] ic [illegible] de a [illegible] a i [illegible] e di [illegible] e [illegible] i de [illegible] e [illegible] ede e [illegible] a [illegible] e a CEE da a 5 [illegible] i i [illegible] a [illegible] a ec [illegible] d [illegible] e [illegible] e, a [illegible] a e de [illegible] a i i [illegible] a bie [illegible] e a ci [illegible] a di [illegible] a [illegible] e di i [illegible] ag [illegible] (3/N/PE 230/400 V).

ATTENZIONE! C [illegible] e [illegible] ef ibi i [illegible] e a [illegible] a- i [illegible] e i de [illegible] i i a e [illegible] f ibi i i [illegible] e [illegible] i [illegible] di [illegible] i [illegible] a [illegible] a [illegible] ici c [illegible] ca a [illegible] e i [illegible] ica C.

Montaggio del comando (non compli 300)

Me [illegible] e e i [illegible] f [illegible] i [illegible] e i c [illegible] a [illegible] d [illegible] [illegible] a - bie [illegible] i a ci [illegible] a di [illegible] a de [illegible] di i [illegible] a- g [illegible] e [illegible] e e 'a [illegible] ggia e [illegible] e [illegible] chi [illegible]. I c [illegible] a [illegible] d [illegible] de [illegible] e e e be [illegible] acce ibi e af- fi [illegible] ch [illegible] ia e [illegible] e [illegible] ibi e [illegible] c [illegible] [illegible]. L'e- [illegible] a id [illegible] e a c [illegible] de [illegible] a [illegible] [illegible] da [illegible] - [illegible] eggia e i c [illegible] a [illegible] d [illegible].

Livelli di commutazione

I [illegible] i di a [illegible] a i [illegible] e e di a [illegible] a i [illegible] e [illegible] i [illegible] a [illegible] i da a fabb ica [illegible] e 'a [illegible] e a di af- f [illegible] a [illegible] da d de a e a [illegible] a [illegible] a i [illegible] e.

Se i d [illegible] e e e i [illegible] a e [illegible] 'a [illegible] a a [illegible] e a di aff [illegible], idefi [illegible] i e i [illegible] di a [illegible] a i [illegible] e ([illegible] c [illegible] i 300) [illegible] ich [illegible] i [illegible] ca [illegible] c [illegible] a i [illegible] e 'af- f [illegible] i [illegible] e ifica e [illegible] i [illegible] ag [illegible].

G i a [illegible] i [illegible] i di c [illegible] a i [illegible] e [illegible] e 'a a e (+ 2 c) e i ca ic [illegible] di [illegible] icc [illegible] (+4 c) [illegible] e g i i [illegible] ia [illegible] i d [illegible] e [illegible] g [illegible] ei [illegible] a [illegible] i a [illegible] a- [illegible] ica e [illegible] e da c [illegible] a [illegible] d [illegible].

Ristabilire il livello di attivazione (non compli 300)

Cicalino di allarme esterno (accessori)

A[illegible] i e [illegible] a [illegible] a [illegible] e de c[illegible] a[illegible]d[illegible].

Ai [illegible] e[illegible] i S+[illegible] e S-[illegible] ibi e c[illegible] ega- e [illegible] a [illegible] a d [illegible] e di eg[illegible]a e ac [illegible]ic[illegible] a [illegible] a 12 V DC c[illegible] a [illegible] bi e[illegible] di c[illegible] e[illegible] e di a . 30 A. I cica i[illegible] di a a - e i[illegible] e [illegible] e e a[illegible] di a[illegible] a ce[illegible]a.

C[illegible] i c[illegible] i 300[illegible] ibi e [illegible] a e [illegible] a - a e i[illegible]de[illegible] e da a [illegible] e c[illegible] e acce - [illegible] i[illegible], e ba[illegible] e e[illegible] e [illegible] [illegible]cc[illegible] di [illegible] aggi[illegible].

In caso di impianti doppi: Spie di allarme o lampeggianti esterne a 230 V (accessori)

C[illegible] ega e a [illegible]ia a 230 V (a . 1 A) a [illegible] - e[illegible] N e 41.

I[illegible] e i j [illegible]e i [illegible] a i da [illegible] e[illegible] U d[illegible] 40. I ci c i[illegible] e[illegible] da F1.

I [illegible] a e i j [illegible]e BRX2 c[illegible] e eg e:
S[illegible]ia a [illegible]eggia[illegible]e e[illegible] a BRX2 ([illegible]e a[illegible]e[illegible]e ===)
S[illegible]ia di a[illegible]e [illegible] a c[illegible] BRX2
(a [illegible]eggia[illegible]e [illegible] _).

[illegible] i a f [illegible] i[illegible]a e a[illegible]che i[illegible] [illegible]da [illegible] di c[illegible] - [illegible] a i[illegible]e [illegible] a e (4e [illegible] f [illegible] i[illegible]a e[illegible] c[illegible] i[illegible], a [illegible] i e[illegible] [illegible] e ic[illegible] di i- ca da e[illegible] de [illegible] e de a[illegible] [illegible]a).

Modalità manuale

P[illegible] a e [illegible] e [illegible] e a bi ic[illegible] i[illegible] i i[illegible]e . Ma[illegible] a e[illegible] La[illegible] [illegible] a f [illegible] i[illegible]a [illegible] a i[illegible] [illegible]d[illegible] i[illegible]de[illegible] e i[illegible] a [illegible]e [illegible] de e ac [illegible] e ef e i[illegible] f [illegible] i[illegible]a e[illegible] c[illegible] i[illegible] [illegible]. I [illegible] - [illegible]aggi[illegible] de[illegible] e e e [illegible] e[illegible] a[illegible] [illegible] a - [illegible] e [illegible] a di[illegible] i ia.

Disattivazione

P[illegible] a e [illegible] e [illegible] e a bi ic[illegible] i[illegible] i i[illegible]e . O[illegible], a[illegible] [illegible] a [illegible] a. L'i [illegible]ia[illegible] di a a e [illegible] a[illegible]c[illegible] a[illegible] [illegible] e i f [illegible] i[illegible]a e[illegible].

Pe i a[illegible] i di [illegible] a a i[illegible]e e a[illegible] - [illegible] i[illegible]e a c[illegible] a[illegible]d[illegible] a a [illegible] [illegible]a [illegible] i i a e a[illegible] i i[illegible]e . O[illegible], be[illegible] acca e e [illegible] e a [illegible]a da a[illegible] e a.

Ispezione

Pe i a[illegible]e[illegible] e[illegible] de a ic e a di f [illegible] i[illegible]a e[illegible] i de[illegible] e eg i e e[illegible] i e[illegible]e [illegible] c[illegible] [illegible] [illegible] de a [illegible] i[illegible]e c[illegible] [illegible] e[illegible] i- [illegible] dei c[illegible] ega e[illegible] i dei[illegible] bi.

FUNZIONAMENTO

Funzionamento di prova e verifica del funzionamento

1. A[illegible] i e i c[illegible] chi[illegible] di[illegible] i ia de e ba[illegible]i[illegible].
2. A[illegible] i e a a aci[illegible]e ca[illegible]e a i[illegible]ea di aff - [illegible]e a[illegible]da[illegible]a.
3. Me[illegible]e e [illegible] e[illegible] i[illegible]e a [illegible] i[illegible]e, [illegible] e - [illegible]a e [illegible]dica i[illegible]e di di e i[illegible]e de ca [illegible] [illegible]a[illegible].
4. Rie [illegible] i e i e ba[illegible]i[illegible] fi[illegible] a [illegible] e [illegible] di a - [illegible] i[illegible]e.
5. O a a[illegible] [illegible] i a[illegible] a e [illegible] [illegible] a i e ba[illegible]- i[illegible]. O e[illegible] a e a[illegible] [illegible]ced a di[illegible] [illegible]aggi[illegible] a[illegible] a[illegible] e [illegible] a di[illegible] i ia.
7. S[illegible] e a [illegible] e i [illegible] [illegible] di a[illegible] i[illegible]e i ga eggia[illegible]e de a c[illegible] [illegible] i[illegible]e di i- [illegible]e [illegible] a[illegible] a e[illegible] e i[illegible] [illegible]d[illegible] e[illegible], fi[illegible]ch[illegible] i [illegible]ia[illegible] di a a e [illegible] ca[illegible]a.
7. Richi de e [illegible] a di[illegible] i ia c[illegible] c[illegible] e - chi[illegible] e g a [illegible] i[illegible]e.
8. Ve ifica e a [illegible] a de e ba[illegible]i[illegible], de e [illegible] ba i[illegible]i e de e c[illegible]d[illegible] e edia[illegible] e [illegible] c[illegible] [illegible] a i[illegible]i.

Modalità automatico

I f [illegible] i[illegible]a e[illegible] [illegible] a [illegible] a[illegible]ic[illegible] a [illegible]da [illegible] [illegible] a e de a [illegible] a i[illegible]e. A [illegible] a fi[illegible]e [illegible] e [illegible] e a bi ic[illegible] de[illegible] e e e[illegible] [illegible] i[illegible] i i[illegible]e . A [illegible] a[illegible] Media[illegible] e a c[illegible] [illegible] a i[illegible]e di [illegible] e [illegible] e[illegible]eg a[illegible] a, a[illegible] [illegible] a[illegible]ie[illegible]e a[illegible] a e di a[illegible] a a ec[illegible]da de [illegible] e [illegible] di i[illegible] id[illegible] e e ba[illegible]i[illegible]. I f [illegible] i[illegible]a e[illegible] e de a[illegible] [illegible] a (c[illegible] c[illegible] [illegible] i 300 [illegible] di [illegible] e i f [illegible] i[illegible]- [illegible] e[illegible]), [illegible]ie[illegible]e i[illegible]dica[illegible] da [illegible] di[illegible]d[illegible] i[illegible] - [illegible] de.

ATTENZIONE! I[illegible] ca [illegible] di ecce i[illegible]a i [illegible] a[illegible] di aff [illegible] (ad e . d e[illegible]aggi[illegible] i ci[illegible]), a a- aci[illegible]e ca[illegible]e 'aff [illegible] de[illegible] e e e i [illegible] a i[illegible] [illegible]d[illegible] che a [illegible] a i[illegible]e di [illegible] e[illegible] a e[illegible] c[illegible] -

MANUTENZIONE

C[illegible] ig ia [illegible] di e eg i e a [illegible] a[illegible] i[illegible]e ec[illegible]d[illegible] e [illegible] e EN 12056-4.

A fi[illegible]e di ga a[illegible] i e [illegible]a ic e a di f [illegible] i[illegible]a- e[illegible] d [illegible] a de a [illegible] a i[illegible]e, c[illegible] ig ia [illegible] di [illegible] a e [illegible] c[illegible] [illegible] di a[illegible] i[illegible]e.

La a[illegible] i[illegible]e de a [illegible] a i[illegible]e di [illegible] e[illegible] a e[illegible] [illegible]e ac e ef e e e i e [illegible] a [illegible] a[illegible] i[illegible]e de[illegible] e e e e eg [illegible] da e [illegible] i a i[illegible] e[illegible] i di 3 e i [illegible] e [illegible] e c[illegible] e ci a i, 6 e i [illegible] e i c[illegible] d[illegible] i[illegible] [illegible] 12 e i [illegible] e ca e [illegible] fa i- ia i).

P i a di [illegible] a ia i a[illegible] [illegible], [illegible]acca e a [illegible]ia de[illegible] a [illegible] a i[illegible]e i[illegible] [illegible]d[illegible] che a [illegible] a i[illegible]e [illegible] [illegible] a e e e e [illegible] [illegible] [illegible] i[illegible]e da a [illegible] e [illegible]e.

Ve ifica e a [illegible] e e[illegible] a di da[illegible]i chi- ici e ecca[illegible]ici a e i[illegible]ee i[illegible] b[illegible] di g[illegible] a e a e [illegible] i[illegible]e. Le i[illegible]ee da[illegible]eggia[illegible] e [illegible]ie[illegible]a[illegible] de[illegible] e e e [illegible] - [illegible] e.

C[illegible] ig ia [illegible] di e eg i e i eg e[illegible]i a[illegible] i i[illegible] fa e di a[illegible] e[illegible] i[illegible]e:

1. Ve ifica e a [illegible] e[illegible] a dei[illegible] [illegible] i di c[illegible] ega- e[illegible] i [illegible] e i[illegible]a[illegible]d[illegible] 'a bie[illegible] e ci c[illegible] - [illegible] a[illegible] e a [illegible] a i[illegible] i e a e [illegible] ba i[illegible]i.
2. A i[illegible]a e a a aci[illegible]e ca; [illegible] e ifica e i f [illegible] - i[illegible]a e[illegible] age[illegible] e, e[illegible] a e[illegible] e - g[illegible] a e e b ifica e.
3. A[illegible] a e [illegible] i ia de a[illegible] a di [illegible] i- [illegible] [illegible]; c[illegible] [illegible] [illegible] de a [illegible] i i[illegible]e e de a fe a[illegible] a).
4. P i ia de a[illegible] [illegible] a e de 'a ea [illegible]e e i - edia[illegible] e[illegible]ici[illegible] e de a i[illegible]ea; [illegible] e ifica de a gi a[illegible] e e de c ci[illegible].

Le gi a[illegible]i a[illegible] e[illegible] [illegible] e- e[illegible] a e b[illegible] di affi a i.

5. C[illegible] [illegible] de 'i i, e [illegible]ece a i[illegible] abb[illegible]c- ca e [illegible] ca bia e (e [illegible] e e[illegible] ca e a d 'i i).
6. P i ia i[illegible] e [illegible]a de e ba[illegible]i[illegible] (e [illegible]ece a- i[illegible] a ec[illegible]da di e ige[illegible] e [illegible]ecia i) ad e . i [illegible] e i g a [illegible].
7. Ve ifica de [illegible] a [illegible] de e ba[illegible]i[illegible] di ac- c[illegible] a.
8. La[illegible] e a a i[illegible]e c[illegible] ac [illegible] a [illegible]g[illegible]i 2 a[illegible]i.
9. Ve ifica de a [illegible] a e e[illegible]ica de a [illegible] a- i[illegible]e. I c[illegible] a[illegible]d[illegible] i[illegible] [illegible] [illegible]ece i a di a[illegible] e[illegible] i[illegible]e, [illegible] [illegible] e, [illegible] i[illegible] a [illegible] [illegible] acc a[illegible] e, [illegible] [illegible]ece a i[illegible] c[illegible] [illegible] a e eg[illegible] e[illegible] i [illegible] f [illegible] i[illegible]a e[illegible]. A [illegible] a i[illegible]e [illegible] di[illegible] i[illegible]e [illegible] e[illegible] a i ga - eggia[illegible] e[illegible] e ba[illegible]i[illegible] fi[illegible]ch[illegible] 'a a e di ac [illegible] a a[illegible] [illegible] e [illegible] e [illegible] [illegible]. Se [illegible]e- ce [illegible] a i[illegible] i e i ga eggia[illegible] e.

A[illegible] e i[illegible]e dei a[illegible] i di a[illegible] [illegible] e[illegible] i[illegible]e, i [illegible] - [illegible] e i[illegible] f [illegible] i[illegible]e a [illegible] a i[illegible]e d[illegible] a[illegible] e e- g [illegible] [illegible]a [illegible] [illegible] a di f [illegible] i[illegible]a e[illegible]. Reda e [illegible] [illegible] [illegible]c[illegible] [illegible] de a a[illegible] [illegible] e[illegible], i[illegible]dica[illegible]d[illegible] [illegible] i a[illegible] i e eg [illegible] i e i da[illegible] i e e[illegible] ia i.

Controllo dell'olio

(Va id[illegible] e [illegible] a i[illegible]i 08/2, 25/2 e 35/2). Pe [illegible] i a c[illegible] a[illegible]e[illegible]g[illegible] a e[illegible] e e[illegible] i a [illegible] a e ag[illegible] a e e a b [illegible] g a i[illegible] [illegible] a a[illegible] [illegible] a e i [illegible] e a [illegible] [illegible] a c[illegible] a gi a[illegible] e da e - ba[illegible]i[illegible]. L'a[illegible] e [illegible] a di ie [illegible] i e[illegible] e [illegible] - [illegible] a e[illegible] de a ca e a de 'i i[illegible] de[illegible] e e e i [illegible] a da 'e [illegible] c[illegible] a[illegible] e di chi a [illegible] O i[illegible]. Pe c[illegible] a e 'a[illegible] e [illegible] di [illegible] a, a [illegible] e id a di i[illegible] de a ca e a de 'i- [illegible]ie[illegible] ca ica[illegible] e acc[illegible] a i[illegible] [illegible] i i[illegible] [illegible] i[illegible].

Se 'i i[illegible] e e[illegible] a ac [illegible] a i[illegible] ecce [illegible] (a- [illegible]), [illegible] [illegible]ece a i[illegible] [illegible] i e 'i i[illegible]. C[illegible] - [illegible] a e [illegible] [illegible]a e[illegible] e d[illegible] a [illegible] e 300 [illegible] e di f [illegible] i[illegible]a e[illegible], [illegible] [illegible]ia a . d[illegible] 6 e i!

Se 'i i[illegible] c[illegible] [illegible] di ac [illegible] a e a [illegible] e [illegible] a[illegible] e e [illegible] a[illegible]ee, [illegible] e a 'i i[illegible] i de[illegible] [illegible] i e a[illegible]che 'a[illegible] e [illegible] di [illegible] a. Pe i c[illegible] [illegible] [illegible] de a ca e a de 'i i[illegible] [illegible] e, a[illegible]che i[illegible] eg [illegible], g i e [illegible] di de [illegible] a [illegible] a[illegible]a ecchi[illegible] di c[illegible] [illegible] de a [illegible] - [illegible] a "DKG" i[illegible]ece de a[illegible] e di chi a "DKG".

Cambio olio

(Va id[illegible] [illegible] e [illegible] a i[illegible]i c[illegible] [illegible]de i di[illegible] - [illegible] e 08/2, 25/2 e 35/2). Pe i i[illegible] de a ic e a di f [illegible] i[illegible]a e[illegible] i de[illegible] e e- g i e [illegible] i [illegible] ca bi[illegible] i[illegible] d[illegible] 300 [illegible] e di f [illegible] i[illegible]a e[illegible] e [illegible] a [illegible] ca bi[illegible] i[illegible] d[illegible] 1000 [illegible] e di f [illegible] i[illegible]a e[illegible]. I[illegible] ca [illegible] di ca [illegible] e [illegible] di [illegible] e di f [illegible] i[illegible]a e[illegible] i ca bi[illegible] di [illegible] i[illegible] de[illegible] e eg i e a e[illegible] [illegible] a[illegible] a 'a[illegible].

Se 'ac [illegible] a di ca ic[illegible]ie[illegible] [illegible] a c[illegible] i- [illegible] e f[illegible] e e[illegible] e ab a [illegible], i ca bi[illegible] di [illegible] i[illegible] de[illegible] e e e eg [illegible] ad i[illegible] e[illegible] i[illegible] b [illegible].

Pe i ca bi de ' i i de e i a e
i e a e id a ic HLP de a c a e di
i c i da 22 a 46, ad e . N di ESSO
DTE 22, DTE 24, DTE 25 di M bi .

La a di abb cc di 380 c e
e M iC UC 08/2 M e 25/2 M e 1000
c e e e M iF ee 25/2 BW e 35/2
BW.

La ca e a de ' i e e abb cca a
c a a di i i dica a. U
acca ic ca a e i g a de a
a.

Controllo del gioco tra taglienti

(Va id e a e a i i e a da de e i de '
ggia e de a e a e de e i di
c ega e e fi aggi de ' i a a i e,
i ge e e ece a i.

I ca di id i e de a e e a di
aggi, a e e de a di f i i-
a e e e e a di i a i e i ffi-
cie e e de a a b ccaggi de a e a)
fa c e a di a de a gi a e
e de g e di i a i e da e e e
i i e e ece a i.

C i e adeg a, ad e . e -
i e, e i a e i gi c i a
ag ie i a i e e a ia a di ag i.
Rid e e e a e gi c i a ag ie i -
e i e a 0,2 .

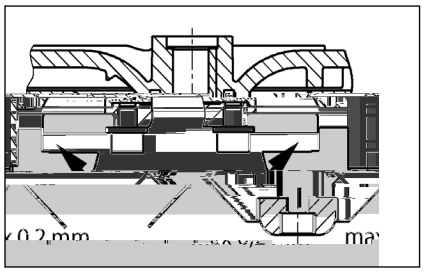

Regolazione del gioco tra taglienti

(Va id e a e e e c gi a e).

1. B cca e i e di ag i c e di
   eg e a e a e ag a e ce a e.
2. Ri e e e e di e i e, i -
   e di ag i e di c di eg a i e,
   i di i a e e e di e i e
   e i e di ag i.
3. B cca e i e di ag i e e a e -
   a e e c a a e ag a e (c ia 8
   N).
4. C e a e a ibe di e e de
   e di ag i e i a e e a e i
   gi c (a . 0,2).

Se i gi c a ag ie e ecce i, i -
e e a di c di eg a i e. Ri e e
e fa i 1-4.

PICCOLA GUIDA IN CASO DI ANOMALIE

La stazione non funziona

C a e e i e di e e, f ibi e e a -
a e e. S i e i f ibi i dife e i
c f ibi i c g i e i a i i a i.
I ca di a i e i e e a, c a e a e
e e ici a i e i c ie i.
I f ibi e a b di e e i e e 2 A i e e
e i a f a e di c e e a -
e a a 230 V dife e i. U f ibi e
dife e e de e e e i i c
de e e e e a e.
Li ea di a i e e a i e da eggia a, i -
i e e ad e a de e d e
C a a i e ga eggia e b cca a =
chi de e a a aci e ca de ' aff ,
a i e i c e chi di i ia i e e i
b cccaggi.

La stazione non funziona, messaggio di allarme

I e e a e e e de e i
di a i e ich a e a b cca a
= chi de e a a aci e ca de ' aff -
, a e i e ba i, i a e a i a,
a e i g e a e i e e i
b cc.

Prestazioni di pompaggio ridotte

Sa aci e ca e a i ea di a da a
a e a c e a e e

Kwalifikacje personelu

INSTRUKCJE BEZPIECZEŃSTWA

UWAGA!

ZASTOSOWANIEH

G[illegible] e d[illegible] c e[illegible]ia [illegible] e[illegible] [illegible] [illegible]ie ciek feka[illegible] ch c[illegible] [illegible] i[illegible] iadaj[illegible] ce[illegible] fi-ka[illegible] LGA k[illegible] [illegible] kcji i [illegible]adaj[illegible] [illegible] d[illegible] e[illegible] [illegible] a[illegible]ia ciek i[illegible] [illegible]a acji[illegible]a e[illegible] i[illegible]i a- [illegible] a ciek g[illegible] [illegible]da [illegible] a d[illegible] [illegible] eg[illegible] a c aj [illegible] ka[illegible] k ad ie.

Zbi[illegible] [illegible]iki [illegible] a[illegible]ia [illegible]e [illegible]a ak a[illegible] - [illegible]k[illegible] ż 2 e[illegible] [illegible]a [illegible]d i [illegible]a c a [illegible]- [illegible]ej 7 d[illegible]i.

S[illegible]e [illegible] [illegible]ik [illegible]ie je[illegible] a[illegible]ia [illegible], ec je[illegible] ch [illegible]- [illegible] [illegible] ed d ia a[illegible]ie [illegible]d [illegible] k[illegible] ej ed g [illegible]g IP 44.

Je[illegible] e i [illegible]a acja [illegible]a a k[illegible]a[illegible]a [illegible] a id- [illegible] [illegible] a ek [illegible] [illegible]acja [illegible]db a [illegible] g[illegible]d[illegible]ie [illegible] e [illegible]ac e[illegible]ie , [illegible]ed [illegible]e [illegible] [illegible]ik [illegible]e [illegible]ia aga[illegible]ia [illegible]ij[illegible]ej D ek[illegible] [illegible] K[illegible] [illegible]a[illegible] bi- [illegible] ci E ek[illegible] [illegible] ag[illegible]e[illegible] c [illegible]ej (EMC 2014/30/ EU) i [illegible]adaje [illegible] d[illegible] a [illegible] [illegible] aż g[illegible] [illegible]da - [illegible] ach d[illegible] [illegible] ch jak[illegible] [illegible]dbi[illegible] [illegible]ik[illegible]d[illegible] c [illegible] d[illegible] ieci a i a[illegible]ia e ek[illegible] c [illegible]eg[illegible]. W[illegible] [illegible]ad- k [illegible]d[illegible] c e[illegible]ia d[illegible] ieci [illegible] e [illegible] ej [illegible]a [illegible]e e[illegible]ie ak ad b [illegible]biek[illegible] [illegible] e [illegible] eg[illegible] a i a[illegible]ie [illegible] e a [illegible] [illegible] a[illegible] f[illegible] a[illegible] [illegible]kieg[illegible] [illegible]a[illegible] cia [illegible]a e[illegible] [illegible] ic ż [illegible]ie - [illegible]a c aj[illegible] [illegible]d[illegible] [illegible] [illegible] c[illegible] [illegible]a ak ce[illegible]ia.

P[illegible]dc a ek [illegible] [illegible]a[illegible] acji i[illegible] a acji [illegible]a e[illegible] [illegible] e- [illegible] egaż[illegible] [illegible]i [illegible] a a i [illegible] k aj[illegible] ch [illegible] a [illegible] [illegible]i [illegible]ka [illegible] ch, jak [illegible]a[illegible] k ad:

- P [illegible] [illegible] [illegible]ie ciek [illegible] [illegible] a[illegible]e ka- [illegible]a i acji b d [illegible]k i d ia ek ([illegible]. E [illegible]- [illegible]ie EN 12050 [illegible] a 12056)
- B d[illegible] a i[illegible] a acji [illegible]i kieg[illegible] [illegible]a[illegible] cia ([illegible]. Nie c ech VDE 0100)
- Be [illegible]iec eź [illegible] [illegible] d eź i [illegible]dk [illegible] a- c ([illegible]. Nie c ech Be[illegible] SichV [illegible] a BGR 500)
- Be [illegible]iec eź [illegible] [illegible] i[illegible] a acji ka[illegible]a i ac j[illegible] ch ([illegible]. Nie c ech GUV-V C5, GUV-R 104, GUV-R 126)
- I[illegible] a acje i [illegible] d e[illegible]ia e ek[illegible] c [illegible]e ([illegible]. Nie c ech GUV-V A3)
- Och [illegible]a [illegible] ed ek [illegible] [illegible] EN 60079-0, EN 60079-1, EN 60079-14, EN 60079-17:2007 [illegible] a EN 1127-1

Zakres dostawy

- Zbi[illegible] [illegible]ik [illegible] [illegible] ([illegible] [illegible]a i) i k[illegible] [illegible]ie a- ci k[illegible] [illegible]a d[illegible] [illegible]cie
- K [illegible]a[illegible]ka ed kc j[illegible]a DN 150 / DN 100 d a c[illegible] [illegible] i 500 i 1000
- M fa [illegible]a ad a[illegible]a d a [illegible]d[illegible] ie[illegible] a[illegible]ia (c[illegible] [illegible] i 1200 [illegible] c e[illegible]ia e a [illegible] c [illegible]e [illegible]bej a i)
- K[illegible] [illegible]ie [illegible] [illegible] c e[illegible]i[illegible] d a [illegible]c[illegible] g [illegible] c [illegible]eg[illegible]
- Z[illegible] c e e a [illegible] c [illegible]e [illegible]bej a i d a [illegible]c[illegible] - g [illegible] c [illegible]eg[illegible]
- U c e ka (c e ki) [illegible] ka[illegible]e d a [illegible] c [illegible]ej [illegible] [illegible] e b a[illegible] ej b da eg[illegible] d[illegible] [illegible] DN 50
- Ma[illegible] e ia [illegible]c [illegible] ce d a bi[illegible] [illegible]ika
- K a[illegible]a [illegible] d a [illegible]c[illegible] g [illegible] c [illegible]eg[illegible] (c[illegible] [illegible] i 300, 500, 1000 [illegible] a 1200)
- S[illegible]e [illegible] [illegible]ik ([illegible]ie d[illegible] c c[illegible] [illegible] i 300)

Tryb pracy: Praca przerywana S3, patrz dane techniczne

MONTAŻ

P [illegible] [illegible] a[illegible]ia [illegible] i[illegible]a [illegible] [illegible]aż ai[illegible] [illegible]a [illegible]- a[illegible]a jak[illegible] [illegible] [illegible] [illegible] [illegible]j ca i [illegible] b abe [illegible]ie- c [illegible] [illegible] ed [illegible] e . Ob[illegible]k i [illegible]ad e ki i e e e[illegible] i [illegible]d egaj[illegible] c i i[illegible] [illegible]ekcji i [illegible]b- d e [illegible]a e[illegible] ach[illegible] aż 60 - ce[illegible] e[illegible] [illegible] [illegible] e [illegible] eź [illegible]b[illegible]c[illegible] .

Od[illegible] ie[illegible] a[illegible]ie: R [illegible]c[illegible] g [illegible]d[illegible] ie[illegible] a[illegible] c [illegible]a e[illegible] [illegible] ad iż [illegible]ad dach.

D[illegible] [illegible]: Na d[illegible] [illegible]cie [illegible] ed bi[illegible] [illegible]ikie [illegible]a e[illegible] a [illegible] [illegible] aż a [illegible] [illegible]d a[illegible]iec c [illegible]ej.

R [illegible]c[illegible] g [illegible] c [illegible] : Za k a[illegible] [illegible] , [illegible]- c[illegible] g [illegible] c [illegible] [illegible]a e[illegible] ai[illegible] a [illegible] aż [illegible]a [illegible] [illegible]- [illegible] a [illegible] [illegible]d a[illegible]iec c [illegible]ej. Je[illegible] e i k a[illegible] [illegible] [illegible]ej b ak je [illegible] ak e ie d[illegible] a i[illegible] a acji, [illegible]ed [illegible]a e[illegible] a [illegible] ż ce [illegible] fik[illegible] a[illegible] [illegible] e EN a [illegible] [illegible] .

R [illegible]c[illegible] g [illegible] c [illegible] [illegible]a e[illegible] [illegible] [illegible] ad iż a [illegible] [illegible] [illegible]ad [illegible]ka [illegible] [illegible] i[illegible] [illegible] [illegible]d[illegible] [illegible] e[illegible]ia.

Ce e [illegible]d [illegible]d[illegible]ie[illegible]ia [illegible] ie c e[illegible]ia [illegible] ad[illegible]- ie[illegible]ia i[illegible] a acji [illegible]a e[illegible] [illegible] e id ież [illegible]d ad- [illegible]iaj[illegible] [illegible] d ie[illegible]k bi[illegible] c[illegible] .

UWAGA! W e kie b [illegible] ce d[illegible] [illegible]c[illegible]- a[illegible]ia [illegible] c eg [illegible] ch e e e[illegible] d[illegible] bi[illegible] - [illegible]ika [illegible] [illegible] je [illegible] d[illegible]k[illegible] caż ak a [illegible] [illegible]- e[illegible] e [illegible]b [illegible] [illegible] 6 N .

Montaż zbiornika

Za k[illegible] ż a [illegible] [illegible]a d[illegible] [illegible]cie ([illegible] [illegible] [illegible]), ce e [illegible]ie [illegible] i ie[illegible]ia ej cia [illegible]d [illegible]dc a [illegible] [illegible] [illegible]a[illegible] .

UWAGA! R [illegible] gi[illegible] [illegible] c e[illegible]i[illegible] e [illegible]i kich d[illegible] ach b[illegible]c [illegible] ch [illegible] ach c[illegible] [illegible] i 300 [illegible]a e- [illegible] i[illegible] a [illegible] i ie jak [illegible]ajb i[illegible]ej i[illegible] a acji [illegible] [illegible] ci [illegible]ak a[illegible]eg[illegible] k[illegible] a[illegible]a [illegible] [illegible] a[illegible]ia. K[illegible] a[illegible] [illegible] [illegible] i[illegible] ież [illegible]k[illegible] ż c[illegible] [illegible]aj- [illegible]iej 180 [illegible] d [illegible] k a [illegible] d [illegible] i[illegible] i[illegible] e [illegible] ad[illegible] ie[illegible]ia. Z[illegible] [illegible]d [illegible] - [illegible] a[illegible]ia[illegible]d ki[illegible] ie[illegible] [illegible]ej [illegible] e d[illegible]j ż d[illegible] [illegible]b e [illegible]d[illegible] e i d[illegible] [illegible] . Ce e [illegible]ik[illegible] cia[illegible]eg[illegible] [illegible] [illegible]a e[illegible] k[illegible]aż [illegible]d[illegible]- ie[illegible] e[illegible]ie [illegible]c[illegible] g d[illegible] eg[illegible] jeg[illegible] [illegible]aj- [illegible] [illegible]kcie. R [illegible]c[illegible] g [illegible]d[illegible] ie[illegible] a[illegible] c [illegible] [illegible]a [illegible]d[illegible] c ż d[illegible] [illegible]d[illegible] ie[illegible] e[illegible]ia bi[illegible] - [illegible]ika.

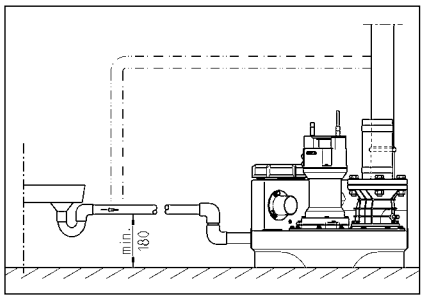

PRZYŁĄCZE ELEKTRYCZNE

P ace e ek[illegible] c [illegible]e [illegible] [illegible] [illegible]ie, [illegible] c ce b [illegible]e [illegible] [illegible]ik [illegible]a e[illegible] e- caż [illegible] c [illegible]ie fach[illegible] c[illegible] .

P ed [illegible] [illegible]c[illegible] cie e kich[illegible] ac e ek[illegible] c [illegible] ch [illegible]a e[illegible] [illegible] ż [illegible] c k[illegible] i[illegible] a acji g[illegible]ia dka i a[illegible]e [illegible]iż, ab [illegible]ie [illegible]a [illegible] i [illegible] [illegible]ie[illegible] da[illegible]e [illegible] c e[illegible]ie [illegible] e [illegible] [illegible]b [illegible] ecie.

UWAGA! W[illegible] c ki ieci[illegible] ej [illegible]igd [illegible]ie a[illegible] aż [illegible]d ie! W[illegible]ika[illegible] ca [illegible]da [illegible]e [illegible] [illegible]d[illegible] aż ak ce[illegible]ia i [illegible]k[illegible]d e[illegible]ia.

Na e[illegible] [illegible] e [illegible] egaż ak[illegible] a [illegible] ch [illegible] ([illegible]. EN), [illegible] [illegible]i k aj[illegible] ch ([illegible]. VDE) [illegible] a [illegible] [illegible]i iej c[illegible] eg[illegible] ak ad e[illegible]e ge[illegible] c - [illegible]eg[illegible].

U a[illegible]aż [illegible]a g[illegible]d[illegible] ż [illegible]a[illegible] cia ieci[illegible] eg[illegible] [illegible]a[illegible] cie [illegible]a i[illegible] i[illegible] a acji ([illegible] [illegible]ab ic ka [illegible]a i[illegible] a)!

I[illegible] a acje [illegible] iada[illegible] [illegible] e[illegible] c [illegible]iki [illegible] i[illegible] [illegible]a[illegible] e[illegible]ie[illegible]ia, k[illegible] e [illegible] c a[illegible] b [illegible] c a[illegible] [illegible] [illegible] a e[illegible] ci [illegible]d [illegible]a[illegible] [illegible]d . S g[illegible]a ak [illegible] c [illegible] i[illegible]eg[illegible] a[illegible]ej i[illegible] a acji i[illegible]f[illegible] - je [illegible] [illegible] [illegible]ie[illegible]i ak ce[illegible]ia d ia a[illegible]ia, - [illegible]ie[illegible] i [illegible]ed , gd je [illegible] [illegible] [illegible] ej ci[illegible] e.

W [illegible] [illegible]adk b [illegible] i [illegible]eg[illegible] [illegible] g a[illegible]ia [illegible] [illegible] [illegible] [illegible]a [illegible] [illegible]i jej [illegible] c e[illegible]ie [illegible] e [illegible] e - [illegible] [illegible] [illegible]je[illegible]i[illegible] e. P ed a[illegible]ie [illegible] c [illegible] ak ceż [illegible]a e[illegible] [illegible] ż [illegible] c k[illegible] g[illegible]ia dka, gd [illegible] [illegible] [illegible] g[illegible] ci [illegible]a [illegible] [illegible] je a- [illegible]c [illegible]e [illegible] c e[illegible]ie [illegible] [illegible] . Be [illegible] ed[illegible]ia g[illegible]a i acja [illegible] e ek [illegible]ie je [illegible] ea i [illegible] a[illegible]a.

Instalacje na prąd przemienny

I[illegible] a acj[illegible] [illegible]a e[illegible] [illegible]d[illegible] c ż d[illegible] [illegible] e[illegible] i [illegible] [illegible] k[illegible]a[illegible]eg[illegible] g[illegible]ia da [illegible] k[illegible] eg[illegible] [illegible]ajd [illegible] - ceg[illegible] [illegible] ch [illegible] ie c e[illegible] [illegible] [illegible] [illegible]ej [illegible] i[illegible] [illegible]d[illegible] [illegible] e[illegible]ia i abe[illegible]iec ż be - [illegible]iec [illegible]ikie 16 A (be ad[illegible] ci[illegible]).

Instalacje na prąd trójfazowy

Ce e k[illegible]a[illegible]ia [illegible] [illegible] c a e ek[illegible] c [illegible]eg[illegible] d a [illegible] e[illegible] [illegible] [illegible]i [illegible]a e[illegible] [illegible] e id ież [illegible] a- id [illegible] [illegible] ai[illegible] a [illegible] a[illegible]e, 5-bieg [illegible] e g[illegible]ia - d[illegible] [illegible] k[illegible] e CEE, [illegible]ajd [illegible] ce [illegible] ch [illegible] ie c e[illegible]i , [illegible] [illegible]ej [illegible] i[illegible] [illegible] [illegible]d[illegible] - [illegible] e[illegible]ia (3/N/PE 230/400 V).

UWAGA! Jak[illegible] [illegible] [illegible]e abe[illegible]iec e[illegible]ia e ek- [illegible] c [illegible]e i[illegible] a acji [illegible]a e[illegible] [illegible] [illegible] [illegible] aż [illegible] c [illegible]ie be[illegible]iec [illegible]iki be ad[illegible] ci[illegible] e b a [illegible] a [illegible] cha ak e [illegible] ce C.

Montaż sterownika (nie dotyczy compli 300)

S e [illegible] [illegible]ik [illegible]a e[illegible] ek[illegible] [illegible]a[illegible] aż [illegible] c [illegible]ie ch ch [illegible] ie c e[illegible]iach, [illegible] [illegible]ej [illegible] i[illegible] - [illegible]d[illegible] [illegible] e[illegible]ia, a jeg[illegible] [illegible]b d[illegible] a [illegible] i[illegible]a b ż [illegible] a e a k[illegible] [illegible]a. S e [illegible] [illegible]ik[illegible] [illegible]ie[illegible] b ż a [illegible] d[illegible] [illegible] , c[illegible] [illegible] i i ka[illegible]dej ch i i k[illegible] [illegible] . W [illegible]ka i g[illegible] ż [illegible] ie[illegible] a [illegible] a k [illegible] i[illegible] [illegible]g [illegible] [illegible] ad iż d[illegible] k[illegible]d e[illegible]ia [illegible] e [illegible] [illegible]ika.

Poziomy załączania i wyłączania

P [illegible]k[illegible] [illegible] c a[illegible]ia i [illegible] c a[illegible]ia [illegible] [illegible] a d a da[illegible] ch i[illegible] [illegible] a acji [illegible] a i[illegible]e fab c [illegible]ie i d a [illegible]a[illegible]da d[illegible] ch [illegible]k[illegible] ci d[illegible] [illegible] .

Je[illegible] e i [illegible] c[illegible] [illegible]bie Paź [illegible] [illegible] i[illegible]e [illegible]k[illegible] ci d[illegible] [illegible] , [illegible]ed [illegible]a e[illegible] [illegible]a [illegible] [illegible] [illegible] defi[illegible]i[illegible] aż [illegible] [illegible]k[illegible] a[illegible] c a[illegible]ia ([illegible]ie d[illegible] c [illegible] [illegible] i 300), gd [illegible] [illegible] e d[illegible]j ż d[illegible] [illegible] a[illegible]ia [illegible]a d[illegible] [illegible]cie.

I[illegible]e [illegible] [illegible]k[illegible] a[illegible] c a[illegible]ia d a a a ([illegible] 2 c) [illegible] a [illegible] [illegible]bc[illegible] e[illegible]iach c [illegible] ch i[illegible] [illegible]a- acjach d [illegible] [illegible] ch (+4 c) [illegible] [illegible] a ia- [illegible]e [illegible] e [illegible] e [illegible] [illegible]ik [illegible]a [illegible] [illegible] [illegible] [illegible] b a [illegible]- [illegible] c [illegible] .

Ustalanie na nowo poziomu załączania (nie dotyczy compli 300)

Na[illegible]ie [illegible] c ż i[illegible] [illegible] a ac[illegible] ch , [illegible] e- [illegible] c [illegible]ik [illegible] b [illegible] c [illegible] - 0 - a [illegible] a[illegible] [illegible] a iż [illegible]a 0[illegible] W eg [illegible] a[illegible]ie [illegible] [illegible]k[illegible] a[illegible] c a[illegible]ia ea i je [illegible] [illegible]d e We fika[illegible] [illegible] a a e- [illegible] a[illegible]a [illegible]g[illegible] ch - A[illegible]a [illegible]ga e [illegible] e K1[illegible] [illegible] a ej [illegible] [illegible]ie [illegible] e [illegible] [illegible]ika. P [illegible] i [illegible]a[illegible]ie de [illegible] a ż [illegible] e [illegible] c [illegible] [illegible]k [illegible] [illegible]d - .

Na e fika[illegible] e [illegible] a a [illegible] a[illegible]a [illegible]g[illegible] ch [illegible]ajd [illegible] [illegible] [illegible] di[illegible]d ie[illegible] e [illegible] [illegible]ak[illegible] a[illegible]e P1 - P2 - P3.

- P1 = F [illegible]kcja diag[illegible] [illegible] c [illegible]a
- P2 ieci [illegible] = [illegible]a[illegible] [illegible]d [illegible]ajd je [illegible] [illegible]ad[illegible] i[illegible] e [illegible] c a[illegible]ia, ec je c e [illegible] ed[illegible] i[illegible] e [illegible] c a[illegible]ia
- P3 ieci [illegible] = [illegible]a[illegible] [illegible]d [illegible] [illegible] g[illegible] [illegible] i- [illegible] c a[illegible]ia

P [illegible] i [illegible]a[illegible]e [illegible]iż bi[illegible] [illegible]ik a[illegible] d[illegible] d[illegible] [illegible]ej k a- [illegible] d i d[illegible] [illegible]d . P[illegible] i[illegible]a [illegible] ieciż [illegible] k[illegible] di[illegible]da P2, a gd ieci [illegible] [illegible]ie[illegible] di[illegible]da P3, [illegible]ed [illegible]a e[illegible] d[illegible]k[illegible]aż eg acji.

P [illegible] i [illegible]b ciż b[illegible] eg ac j[illegible] [illegible]ajd - [illegible] [illegible] [illegible] [illegible]ej di[illegible]d P1 [illegible] d a [illegible]b [illegible] kie- [illegible]k g[illegible]d[illegible] che ka ek ega- a. Te a [illegible]a e[illegible] a[illegible] [illegible] [illegible] ak bi[illegible] [illegible]ik [illegible] [illegible]ej [illegible] [illegible]k[illegible] [illegible] c a[illegible]ia i [illegible] ciż [illegible]b[illegible]d- [illegible]ie, ab [illegible] a . Je[illegible] e i ie [illegible]a di[illegible]da P3 [illegible] a i [illegible] [illegible]ada , [illegible]ed [illegible] [illegible] i [illegible]b ciż b[illegible] e- g ac j[illegible] [illegible]a [illegible] [illegible]b [illegible] kie [illegible]k g[illegible]d- [illegible] che ka ek ega a i a[illegible] ż [illegible] [illegible] [illegible]ie[illegible] ak.

C [illegible] ci [illegible] e [illegible] a aż [illegible]ak d g[illegible], a[illegible] di[illegible]- da P3 [illegible] e [illegible]a[illegible]ie [illegible] ieciż, a [illegible]a [illegible] [illegible] [illegible] [illegible]ie [illegible]b ciż b[illegible] eg ac j[illegible] kie- [illegible]k [illegible] eci [illegible] d[illegible] ch ka ek e- ga a, a[illegible] di[illegible]da P3 a[illegible] i [illegible] [illegible] [illegible]ie. P [illegible]k[illegible] a[illegible] c a[illegible]ia [illegible] a eg [illegible] a[illegible] .

Instalacja alarmowa

S g[illegible]a [illegible] [illegible] e kach ea i [illegible] a[illegible]e [illegible] a - [illegible] [illegible] c [illegible]ie jak i ak [illegible] c [illegible]ie. Se j[illegible]e, a- e[illegible]e [illegible]d d ia a[illegible]ia ieci e ek[illegible] c [illegible]ej i[illegible] a- acje a a [illegible] e g a a[illegible] ak ce[illegible]ia [illegible] ac i [illegible]ika [illegible] [illegible] (c e [illegible]a di[illegible]da [illegible] AD 00 i c[illegible] [illegible] i 300). Jed[illegible]c e [illegible]ie, da a[illegible] je [illegible] i[illegible]eg [illegible] a[illegible] g[illegible]a ak [illegible] c [illegible] . Te[illegible] g[illegible]a ak [illegible] c [illegible] [illegible] [illegible]a [illegible] c ż jed [illegible]ie [illegible] e [illegible] cie [illegible]e ki b [illegible] e jeg[illegible] ge[illegible]e a [illegible]e [illegible]d[illegible] c e[illegible]ie.

Je[illegible] e i iej ce [illegible] [illegible]a[illegible] [illegible]ie [illegible] a a [illegible]a ak - [illegible] c [illegible] g[illegible]a i aci[illegible] ak ceź, [illegible]ed g[illegible]a a a [illegible] [illegible] [illegible]a [illegible] e[illegible] a[illegible] [illegible] aż da ej [illegible] e [illegible] k be [illegible] e[illegible]cja [illegible] (aci ki 40 i 41) [illegible]a [illegible] cie [illegible]b [illegible]d ([illegible] [illegible]adk c[illegible] [illegible] i 300 e [illegible] c ce). Ze [illegible] k ie [illegible] g[illegible]a i a- cji bi[illegible] c ej a ak a[illegible] [illegible]bc[illegible] [illegible]a [illegible] ż [illegible] d[illegible] [illegible] 5A / 250V AC. S[illegible] k [illegible] ie a [illegible] [illegible] [illegible] ci [illegible]e ki.

Akumulator dla instalacji alarmowej (nie dotyczy compli 300)

U [illegible] d e[illegible]ie a a [illegible] e je [illegible] e j[illegible]ie a e[illegible]e [illegible]d ieci e ek[illegible] c [illegible]ej - [illegible]j. [illegible] [illegible]adk a[illegible]i- k [illegible] d [illegible]ie [illegible]a [illegible] [illegible] i a a [illegible] [illegible]ki [illegible]a- [illegible]ie [illegible]d . Ce e d[illegible] [illegible] ad e[illegible]ia i[illegible] a acji a a [illegible] ej d[illegible] d ia a[illegible]ia [illegible]ie[illegible] [illegible] [illegible]adk a[illegible]ik [illegible] d [illegible]a e[illegible] a [illegible] [illegible] aż ak [illegible] . O[illegible] [illegible] ż [illegible] e [illegible]c [illegible] e d ic ki. P[illegible] c ż ak [illegible] d[illegible] [illegible] c a i [illegible] [illegible]c[illegible] aż g[illegible] d[illegible] [illegible]ki [illegible] e id ia[illegible] iej c a [illegible] [illegible]- [illegible] d[illegible] c [illegible] ch [illegible] e [illegible]a [illegible] a ek kab [illegible]- ch. Ak [illegible] [illegible] je [illegible] [illegible] a[illegible]ie a i aż [illegible] d e [illegible] a a [illegible] ,[illegible] e [illegible]k. 1 g[illegible] i[illegible] . P[illegible] [illegible] [illegible] [illegible] [illegible]ja ie[illegible]i [illegible] a i a[illegible]ia, ak - [illegible] je [illegible] a [illegible] [illegible] c [illegible]ie ad[illegible] a[illegible] .

Na ad[illegible] a[illegible] ak [illegible] [illegible] d ia a [illegible] e [illegible]k[illegible] [illegible] 24 g[illegible]d i[illegible] ,[illegible] e [illegible]e [illegible]a ad[illegible] a[illegible]ie [illegible] [illegible] ga [illegible] [illegible] 100 g[illegible]d i[illegible]ach ad[illegible] a[illegible]ia.

Na e[illegible] eg a [illegible]ie k[illegible] [illegible] [illegible] aż [illegible] a [illegible] ż ak [illegible] a! W [illegible] ce [illegible]a e[illegible] [illegible]d[illegible] c ż g[illegible] ieci i ak[illegible] [illegible] aż g[illegible]a i aci[illegible] [illegible]kie- g[illegible] [illegible] [illegible]d . Na[illegible] e[illegible]ie [illegible] [illegible] k a a ak [illegible] c [illegible]eg[illegible] [illegible] i[illegible] [illegible] e ki ka i[illegible] [illegible]ie [illegible]iej aż a a[illegible]a [illegible]ie ej a [illegible] ci. Jeg[illegible] [illegible] [illegible] ż [illegible]k e a [illegible] [illegible]a [illegible]k. 5 [illegible]. Na e[illegible] [illegible]d- [illegible] aż da[illegible] [illegible] [illegible]c[illegible] cia ek [illegible] [illegible]acji i [illegible] 5 [illegible]ach d[illegible]k[illegible]aż ia[illegible] .

S[illegible] [illegible] aż ak [illegible] [illegible] c [illegible]ie 9V! W [illegible] [illegible]adk [illegible] [illegible] a[illegible]ia ba[illegible]e- ii ch ch, [illegible] je [illegible]iebe [illegible]ie- c eż [illegible] ek [illegible] ji!

Licznik godzin pracy

O[illegible]cj[illegible]a [illegible]ie, [illegible] [illegible]a [illegible] e [illegible] [illegible]ik a [illegible] [illegible]- aż ic [illegible]ik g[illegible]d i[illegible] ac ([illegible]ie d[illegible] c [illegible] [illegible] i

300). W ce a e k ciż c a ic ika g d i ac d 8 i e k ż d g ia dek a ce iej c BSZ. Je e i adk ce a e g c e ia i a acji ie a i g a , ed a e ic ik g- d i ac b ciż 180 .

Wyłączenie wewnętrznego buczka alarmowego

Nie d c c i 300. Zd ż g a (BRX/BRX1). Ab ie aciż c ki, a e a ad iż k a ież 2-bieg - ej i ie i ej.

Zewnętrzny buczek alarmowy (osprzęt)

O ż e c e d ic ki e ika.

D aci k "S+" a "S-" a d c ż d da k , b g a i a ak c a a a cie 12 V DC b e d ak . 30 A. B c ek a a k a ed g - c e ia c ż b c ż.

W adk i a acji c i 300 a jak a ż a a ie a e d iec i e ek c ej, a c k a je a bi ik d d cji.

W instalacjach z dwoma pompami: Zewnętrzna lampa błyskająca lub ostrzegawcza (osprzęt)

P d c ż a 230V (ak .1A) d aci k N a 41.

Zai a a a ek e ie ciż aci k U a aci k 40. Ob d e ek c je a- be iec e F1.

U a iż k BRX2 a j c b:
La a b kaj ca be BRX2
(e a e e ===)
La a e ega c a BRX2
(igaj ce _ _ _).

EKSPLOATACJA

Próba działania i funkcji

1. O ż k c k bi ika.
2. O ż a a d cie i c g c .
3. P d c ż i a acji d a i cia, - ciż a a g a i acji k ej ci fa i i a.
4. Na e iż bi ik a d i a c a- ia.
5. P a c a i i a bi ik. D ia a ie i ddaż b e acji e e k .
6. P d ie ż i c ie ak e c - c a ia i a ad i a c a- ia, a de ie i a a .
7. O c k a k ż k c i c e k .
8. P e ki ka c k i a c a ia a d iż c e ż bi ika, a a i c - g .

tryb automatyczny

N a a be ac i a acji je b a a a c . W ce e c ik a e a iż a i c a ie i c a ie i d ied i d a a a e ie ia bi ika. P aca i b c 300 g- a ż d ac) g a i a a je ie di d .

UWAGA! W adk j k d eg d (. c a ie d ba e) a e a a d ie d a iż e i b ab i a acja e i i g a ada ac a ż a a bie e- a ia (ie aca c j g a, gd je a- g e ie eg a ia i ika i).

Tryb ręczny

P e c ik a iż a b c a "Ha d". P a ac je ie a e ie d a i i- ciek , bie ac c j g ej. Z eg i - d d i a a ie a e b e a aż e c k .

Wyłączenie z ruchu

U a iż e c ik a "0", a je e i b c e ie i . I a acja a a - a je a ada g a d d ia a ia.

W ce ach a a c ch i e i - ch e ika b i i ie a- e aż i cji "0" a e- c ik , ec a e aki adk j aż c k g ia dka.

Inspekcja

Ce e a ia be iec eż a ek i a- acji a e d k aż c ie i c a ch k - a i k ch i a acji, c ie i c - c e ia i a c j gach.

KONSERWACJA

Za eca a d e ie e i a ia ed g EN 12056-4.

Ce e a e ie ia a ej i be a a j ej ac Paź a i a acji a eca a a cie e i a ej.

Se i a ie i a a a e - a i ciek feka a ch i i b ż a ad e ach c c a i c j c a 3 ie j ce adk a a aż biek ach bi a eg a k , 6 ie i c a ch adk d ie a - d i ch b 12 ie i c a ch adk d jed d i ch.

P ed i c cie e kich ac e ek c a ch a e j ż c k i a acji g ia dka i a e iż, ab ie a a i a ie i da e c c e- ie e a b ecie.

S a d iż e d d g - i c k d k e k d eż c ika i echa ic i i che- ic i. P e d k d e b a a- a e a e ie iż.

P dc a e i a a ia a eca e a- d e ie a i j c ch ac:

1. Sk a a ie iej c c eż d k - e c e ci e a i c e ia i a acji.
2. U ch ie ie a ; k a a ie d g de a a ci ch , a ie k iec a ci d eg a a ie i a a- a ie.
3. O a cie i c c e ie a a eg; k a a g ia da i k ki (k a).
4. C c e ie i a i ef c iad j cej c a i c j g ; k a a i ika i k a a ia.

Z e i iki g ież e k a d ie.

5. K a a ej , e ie ie a b jeg ia a (i e je k a a ej a).
6. C c e ie a a bi ika (a e- a ci d i a eb, g . g c e- g ch), . a ie c .
7. K a a ie a bi ika.
8. C 2 a a ka ie g e i a acji d .
9. K a a e ek c ch k e a i- a acji. S e ik je be b g , a- e i a ż ak a , c i a - d je k ie a ż eg a ej k a i jeg d ia a ia. O c eg , c c ej a cia i a acji a e d ie ż - ak bi ik , a de ie i a a i- f j c k i a ie d . O c eg , a e a ci d i a eb a e c ciż a ak.

P k a a i ac i e ekc j ch a e ch iż i a aci e e a- d e ie a a ch b d ia a ia. Na e a e i a a ia a e e d iż k k da ie kich c a ci i i a ch da ch.

Kontrola stanu oleju

(Od i k d i a acji 08/2, 25/2 a 35/2). W ie ej k ej ci a e - a aż b e ci k e i i b a e k i j ż a e a i ikie e bi ika. O a d a e ia i a e - c a ia a ej c a k i e c e ia d e b k a i e ". W ce k - a i i g ch ie cie i c e ia j c ch a e ca k icie, a e ka i ciż ej k a a ej ej d c eg ac ia a ia a eg.

Je i d a ej ed a a i da (k- a ec), ed a ej a e ie iż. Sk a a aż a ie da ch 300 g d i ach ac , jed ak ak a ie a 6 ie j cach!
Je i d a ej ada ed a aje i da a a c ec ki a iec c eź, ed c a ej a e d k a aż ia i g ch ie cie i c e ia j c ch. Ce e a i a a ie k a a ej ej a a a a aż d da k a e ek d a eg c d e ia c ceg d k a i

c e ci DKG" i k ciż j iej ce bki a a ia j cej a i e DKG.

Wymiana oleju

(Od i k d i a acji a i 08/2, 25/2 a 35/2). Ce e j g i cia be - iec eż a ek a acji a e ie e a e ie a eje ie iż 300 b - c g d i ach, a a e a 1000 b c - g d i ach. W adk i kieg a ebieg ie eg b c g d i ach a e d - k a aż ia a ej ie ad iej i a k .

W adk ciek a d a ie kach cie - a ch, ia a ej a e d k a aż c - ciej.

D a ia k a e a ej a ej a e - a aż i e a a ej h d a ic a HLP k a ie a k ci d 22 d a 46, a . M bi DTE 22, DTE 24, DTE 25.

I a ż a a e ia ia a i 380 c adk a M iC UC 08/2 M a 25/2 M, a 1000 c d a a M iF ee 25/2 BW i 35/2 BW.

K a a ej a a a e ia ż c a ie i a c i a c ej . P e ia ie - ad i d k d e ia a .

Kontrola luzu cięcia

(Od i k d a i ikie - c) K a a aż b b d a b a c e i a e i a c ach i a - ac j a ch d g de a id a eg d - k ce ia i a ie a b d k ciż.

W adk ie ia b i e ia daj - ci c e ia, a ceg ha a a c - ceg a ac b iej a cej j daj ci cia (b k a a ie j a) a e eciż fach c k a a i ika i echa i a d ab ia ia i a ie k a iec a ci d k a aż ia .

L cia a c j d i ikie c i a a ie ż d - a ied i i a da i, a c e i a ie - e . L cia a ej 0,2 a e iej ż.

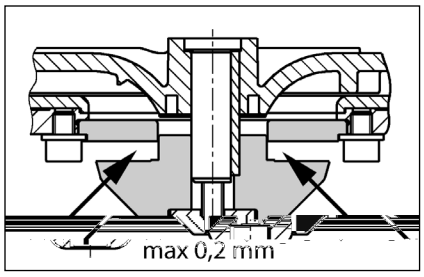

Regulacja luzu cięcia

(Od i k d a i ikie - c).

1. Zab k aż ka a kie d e a i ik - c i k ciż ce a b i b .

2. Zd ż k a k d ci k , i ik c i jed adk eg ac j , a a e ie a e a ad iż k a k d ci k i i ik c .

3. Zab k aż i ik c i k ciż g a i b i b (e d k - ca ia 8 N).

4. S a d iż ekk ż ch b eg i - ika ceg i e ie ż cia (ak . 0,2).

Je e i cia je b b d , ed a e ż a e a dk adk eg a - c j . Na e a ż k ki d 1 d 4.

MAŁY PORADNIK USUWANIA ZAKŁÓCEŃ

Instalacja nie działa

S a d iż a cie ieci e, be iec ik i c ik ic d U k - d e be iec iki a e ie iaż a akie a e d g de a a e a i e ch. W adk a a - j ceg i ad ia a ia a e e aż e ek ka b ac ik d ia b gi k ie a e a e a d ce a.
U k d e a be iec k a k 2 A a f a a e - j ceg 230/12V, be iec ik i ik a a dej cie a d e ie 230 V.
U k d e be iec iki a e ie - iaż a akie a e d g de a a - e a i ch.
U k d kabe c a ieci eg, a a e eciż c ie d - ce a i
Zab k a a c ik ak = a - k ż a a d cie, a a ż a - k c k i ż b kad .

Instalacja nie działa, sygnał alarmowy

Te a a je iach i ika a a b d, gd a i a b kada a = a k ż a a d cie, a iż bi ik, j ż c k ieci c , de - a aż a a a i ż b - kad .

Zmniejszona wydajność tłoczenia

Za a c j g c a ie a a a ca k icie a a
Za ka a c j g c a = a każ - c j g c a
Za ka a k a a a = a k ż a (adk c a i 300 a iż a - c j g c a) i c ciż k a a a
Za ka e d a ie e ie a a = c ciż c j g a a- bi ik i k a a a aż a a .

Pali się sygnalizacja "Drehfeld falsch" (niewłaściwy kierunek pola, ttaŻa

BEZPEČNOSTNÍ POKYNY

POZOR!

Kvalifikace personálu

Bezpečný způsob práce

Bezpečnostní pokyny pro provozovatele/obsluhu

Bezpečnostní pokyny pro montážní, kontrolní a údržbářské práce

Svévolná přestavba a výroba náhradních dílů

Nepřípustné způsoby provozu

Pokyny pro prevenci úrazů

POUŽITÍ

Za e4 4a ů e ů 4 fek ii c4 ů i, ů i- ů a e4 k a 4je4 je 4d k4 e44 LGA a je h4d4 k ů e ů 4 4d ad4 4d 4a e a i 4 a i4a 4d d4 c44 4b- k i ů ada í.

N d e 4h4 b a 4 e4 a i 4 - k4 2 4d4 h4 4 ce ů 4d d4b 4ejd e 7 d4 .

d c jed44 ka 4e b a 4 e4a, je a e ch 4 4a ů 4 i kaj c 4d ů 4d e IP 44.

P i d4 i4 a aci a d4 ů 4 4 ů - ť je d c jed44 ka ů 4 ad k 4ch a4 ů 4d e 4ice EMC 2014/30/EU a je h4d4 ů 4 ů 4 i 4 d4 c44 ech e ej4 i 4- b4 4 e ek ick ů 4 de . P i ů 4je4 d4 ů 4 4 ci 4 jak h4 ů - 4 h4 ů 4d4ik e 4b4 4 4 a 4 h4 4k44a ů 4 h4 a4 f4 4 je 4 44 a ° i ch 4k4 44 ů 4 a 4ed4 a ů 44 4d4 44 ů ů 4 i e4 .

P i ů 4 4 a e4 b d4d 4 4 ů ů ad4 4 4d4 k44 , ů ed i a 4 h k , jak4 4a ů .

- e ů ac a4ice 4d ů ad4 ch 4d ů 4 b d4- a ů 4 e k (4a ů E 4 EN 12050 a 12056)
Z i 4 4 4 k44a ů 4 ch a e4 (4a ů N eck VDE 0100)
Be ů e 44 a ů ac4 4 ů 4 edk (4a ů N eck Be SichV a BGR 500)
Be ů e 44 4 ů ech4ick ch a e4 ů 4 ů a k4 4 4d (4a ů N eck GUV- -V C5, GUV-R 104, GUV-R 126)
E ek ick a e4 a ů 4 4 ů 4 edk (4a ů N eck GUV-V A3)
Och a4a ů 4 i e ů 4 i EN 60079-0, EN 60079-1, EN 60079-14, EN 60079-17 a EN 1127-1

Rozsah dodávky

N d ° e ů ad e ( ) a ů ac ů b4 ů 4 ů 4k
Red kce DN 150 / DN 100 ů 4 c4 ů i 500 a 1000
P e ů e 4 ů 4jka ů 4 (c4 ů i 1200 e a ick ů 4jk e 4 k4)
P ů 4j4 ac ů ba ů 4 ak4 ů 4 b
E a ick ů 4jka e 4 ka i ů 4 ak4 ů 4 b
N 4 ( ) 4 4 ů 4 ° 4 e b 44- ° e ů ad 4 4eb4 da ů 4k DN 50
U e 4 ac a e i 4 d e
Z 4 k a ů ka a ak4 h4 ů 4 b (c4 ů i 300, 500, 1000 a 1200)
d c jed44 ka (4e c4 ů i 300)

Druh provozu: Přerušovaný provoz S3, viz technická data

MONTÁŽ

P e ů ac a e4 b a 44 4 44 ak, ab 4d4 a 4 ak a b 4 4 4 4j - c . Ved e a 4ad e i° i, k e 4 k 4b e a ů 4 d b , b k di ů 4 ici ů ac4 4 ů 4 4 i 4k , e ů ek e 4k i4i 4 60 c .

Od : V ac ů 4 b b e- de44 4ad ech .

P 4k: V ů 4k b ů ed 4 d - 44 4 ů k4 4ě i 4 4d .

T ak4 ů 4 b : Za ů 44 k a ů k4 ak4 - h4 ů 4 b a 44 da 4 ů k4 4ě i 4 4d . P4k d 4e4 ů 4 k a ů ka 4° d4d k a e4 , de b a- 44 4 4a b a4a ů 4 i ů 4 4k .

T ak4 ů 4 b 4 ů 4d4b ° k ů ede- 44 4ad 4k 4 4 ů 4 ů 4 h4 d .

P 4 4d4d4 4 ů 4 4 i4 a ace je 4 44 aji i 4d e ů ac j k .

POZOR! V ech4 4 b , k e 4 k ů e- 4 4 4 ° 4a 4 d i, j b a e4 a i 4 4 e4 e 6 N .

Montáž nádrže

4 ů k4 ů 4k ů e4 4 ů)ů 4 ab - 4 4 4ik4 4d ů b h 44 e a- e e.

compli 300. V 4 e 4 4 ů 4 ů 4 ad4 a4 ů 4k DN 100 ů 4 a4 4eb4 4ah4 e i 4 d 4 4k 102 4eb4 ů 4 e ů ac ů i 4 4 - 4 4å e4 a 4djeh e e jej. P ů 4je44 4 - ac ů b ehce ů e4 e e ih a44 i 4 b 4a ů 4k.

he 4 k ů 4 k4 e4 a e4 ů i 4 b je 4a 4 d a ů 4 4 a e4 e 4 ac ů - b4 ů 4 ť e 4a ů 4k4 ů 4 b a 4a d4- a .

P4 4ak e e e 4å k ů 4 ů 4d ah4 h 4 - di4k 4 ej e 4 4 a 4 e h 4 di4k .

N 4 je 4 44 4 ac ů b ů e4 ů i h- 44 a a e4 k4 4 k ů 4d a e 4 b d4 e a ů 4d 4 ka i.

Všechny ostatní typy compli P e ů ac a e4 e 4 ac ů b4 ů 4 ť e 4a ů - 4k4 ů 4 b a 4a d4 a a e e 4h .

Je i e b ů 4 i a44 ů 4d DN 150, ak b 4ejd e 4 e4 a ba e4 4 ů 4 4c d 4k 152 4 4å e- 4 . a4da d4 ů 4d b ů 4 4 a4 e4 a ů 4 i a ac 4 ů a ů 4 ů e4) a h adi4a a ů 4 4 b 44 a44e4a.

Pokyn: U a e4 c4 ů i 500 a 1000 e b e ik4 ů 4k 4 e4a DN 150 4a DN 100 ak, e e ů i 4 e4 ed kce 4ej e 4 d4 4 ac ů b .

P e4 ů i h4 e e ih a44 4 b 4 ac ů b .

4å e a e ej e 4 4 ů 4 ů e4 4 4 d e d4 ů 4d ah .

O 4 e 4 d e ů 4 é 4 ů 4 ť e 4 b d4 d e a ů 4d 4 k4 a h 4 di4k a ů e4 ů i- h4 e.

POZOR! 4 b i h4 e ů 4 e ak, ab e 4 d 4e def4 4a a, ji4ak h 4 4ebe ů é 4e 44 i.

U a e4 k44 k 4 ad c4 ů i 1200 e 4 d je 4a c ů e4 4 a a4 4 i he 4 k .

Montáž větrání

Od ac ů 4 b ů e 44 4bj k4 DN 70 ů 4j e 4 a4 4ah4 e 4a 4 d i a- a e 4ad ech .

U a e4 c4 ů i 1200 4ad h4 4 ů a4 ů 4 78 4d 4 e 4a 4 4å e4 a 4djeh e e. N 4 ů 4j e 4d ac ů 4 b e a ick4 ů 4jk4 DN 70 a é e 4ad ech .

Montáž tlakového potrubí

Na ů 4 ů b 4a 44 j e:
1. 44 k a k 4k d 4e4 4° d4d k)
2. a ac 4 ů k4 ů e4)
3. ů 4j4 ac ů b a
4. ů 4j e e a ick4 ů 4jk4 ak4 ů 4 b a ů 4d4b ° k é e 4ad 4k 4 4 ů h4 d .

Připojení DN 50 vertikálně k nouzovému vypouštění

Ta 4 ů 4jka e ů 4 ů 4 ů 4je4 ° 4 - h4 e b 44 h4° e ů ad a.

O 4 4å e4 4dd e ů i k4 4d jk4 a 4djeh e e.

Na á e 4 4 4 58/50.

P 4k4 ů 4 b 4j ů e 50 ť e 4 4 4 d4 4 d - e. V d e44 4de d4a 4 d e b a b 50 .

R ° 4 e b 44 ° e ů ad 4 ů e4 e 4a á ak, ab b 4 d4b e ů 4 , ů 4j e jej 4a 4 4 bk4 a ů 4 ů 4j e ak4 ů 4 b ° 4 h4 e b 44 h4 ° e ů ad a.

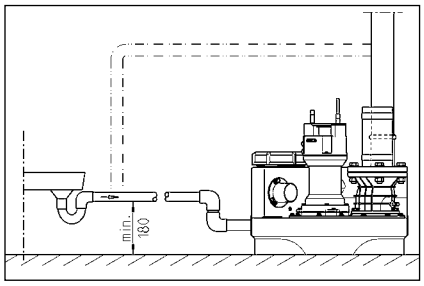

ELEKTRICKÉ PŘIPOJENÍ

P ce a° e ad , k ek e eb j b d je k a- ifik a e ek ech ike .

P ed ka d ac h e k a e a abe e e, ab a e e h ji a b a- ji d a .

POZOR! S k ikd e k dej e d d ! P ad ik ik da e a edek ch a k e .

Je d d a ech e a e (a . EN), i e d i (a . VDE), jak i ed i ch e a e e - ge ick ch .

D d j e e a (e ek)!

Za e aj h d ed e e h adi- , k e ° e ad i e i a a d a e, e ek j e e e. Z k a e ab d a h e a h a e ig a i- je f k e ch i ehd , e k d je e e ech d .

P k d e° e ad e i h , e a- je e . P ed d a e e ° i e ch b a e a e ka, e e b e ji ak ° e ad e e ch a e a e i e e a h e a.

Zařízení se střídavým proudem

Za e b e je e e d d ai a a e k , k e je a ch b a i ad h adi e a d a je aji a e ji k 16 A (e a).

Zařízení se třífázovým proudem

E ek ick e je e ů e e ac h a e- b e ede e 5 e e k CEE, ai a a e d e ed i , k e je a ch b a i ad h adi e e d (3/N/PE 230/400 V).

POZOR! Jak e ji k a e je e e - a e e a e ji k eb a a a C cha ak e i ik .

Montáž řídící jednotky (ne u compli 300)

d c jed ka b e e a ch b a i ad h adi e d a jej k b e d a e a. d c jed ka b d e b e , ab b a kd k i e e jej k a. V k h k d ch a k de- e a d c jed k .

Hladiny spínání

B d e a a e a j e i b a- a e e a a da d e k e k - e h a e .

P k d e e ji e k , e e defi e a b d a e (e c e i 300), e e ji ak e d j ke d e k .

Da e ac b d e e e ach (+ 2 c) a d ji ch a e e e i k e e (+4 c) e ak d c jed ka a a e a e ick .

Nové určení hladiny zapnutí (ne u compli 300)

Za e e a e ech d d k i- d , e a e d e -0- a e a ika (Ha d-0-A e a ik) a a e d e e h 0 . Se e b d a e e e d d - A a g e e h d c e a K1 e a e a a e . Od a e a e ech d d b e h ed k d .

Na a a g e e h d c e a i e ach ej i e e di d , k e j e e a e P1 - P2 - P3.

M ek BRX2 a e ed:
B e k be BRX2 e a e ===)
a BRX2 (b ik).

PROVOZ

Zkušební běh a funkční zkouška

1. O e e° i c k d e.
2. O e e e ka k k a ak- b .
3. P e a e a a , k j e i dikaci ° e e.
4. Na ť e d a h adi a .
5. e ad e a e e d d . S ed j e b h° e ° i c e .
6. P k å e h adi a a ° e- dej e ad b d a , a a a - e .
7. i c a k j e k e a -
8. N k ika i a i e i ek j e d e, a a b .

Automatický provoz

A a ick je d h a - a e. K a ° e b k b- k a å a e "a a a ika". I eg - a a d a e a ° e ad e a ka a i a - d i. P ° e ad a (c a i 300 a a h a (je i dik a e e di d .

POZOR! P i ji å k k (a k ad i a k a ba a) b a k a k a a ik i k ce, ab å e e ac a e i ad e ac a a a ac a d a a (d a a a , ji ak ik ebe å e h a - ° e ad a).

Ruční provoz

K bk å a a e d a ice " ° ". e ad a a a ac je e i e a d a i a k d a . P b h å d e a b a b ed ° i - c e .

Vypnutí

K bk å a a e d a ice "0", ° e ad a je a a a je d e a e.. P a a a e je e a e k a .

P a a d b a d c jed k eb° e ad a a a a ej e a ici "0", a b d a h e ° k e k .

Inspekce

P ach a a a be å i je a ka d c a d ick k a - e a e jek a b .

ÚDRŽBA

D a ° je e a d b d a- a EN 12056-4.

P a aji a a a a be å i Va eh a a e V d a ° je e a a d b .

d b a e a a å e e a fek i a i a j a d db a ci i e a ech 3 c a d ik f e, 6 c a je a ch d- ech ce b a 12 c a di ch d- ech.

P ed ka d a ac h e e a k a e a abe å e, ab a e e h ji a a b a - j d a a .

S jk a g hadice ek a - j e a echa ick a che ick a k e. P k e ° i e e é- a b ej b a a a.

D a ° je e i d b a d a ed - j c a ce:

1. K a a j a a e f a h e- d a k a e a a a .
2. U ede a a ek d a h b , k a a a ehk a i ch d , a a ad a e e a a- a a .
3. O e e a a ° i a a b a i a a - k , k a a a a h a k e (k a k).
4. V° i a ° e ad a a be a a ed a a - je a a k a ° i, k a a a b a h k a a a e.

O a ebe a b a k a a a h a .

5. K a a a eje, a ad a d a a , a eb a a a eje k d je k di a ici a ej k a a).
6. V° i a a i k a d e (a ad a a e- b , e . a d e eci a ch a ada k), a a . d a a a k .
7. K a a a a b a a d e.
8. Ka d 2 k a ch a a e a d d .
9. K a a e ek ick ° i a e a . d- c jed a ka jak a ak je be d a a a f a - a . K a ° e ede j e a i a e a be a a a k a d e, a a a a - a ach a i a a. K a a h a je a a a a k a a ad a a eb ° i j.

P a ede a d b e a e a a k eb- a b h a a ede d a a . O a ede a d b je a a a a ac a a a k a ede- a ech a ede a ch a ac a a d a a a ch da .

Kontrola oleje

(P a a e a e a 08/2, 25/2 a 35/2). Jak a a e a e ih a a a - b , e a ek e a b a i a e ih a e a a b d ° e ad a a° e ad a e b a k a e ej e a d e. P a c a a d a- c a a ej k a a je j k a a a a a a be "a ej". P a k a a a - a a ec k a ke e a ej a e- j k a a e e a b k a h a a a a ach e i a a a d b a.

P k d je a eji a da (° a k a i e a ce), b a ede a a a a eje. P a da ch 300 h di a ch a a , a i a a ak a 6 a c ch, a a e k a a a a !

P k d a ak je a eji a da a a å i a , je a - a k a a eje a a i a ak a a a k a k a ke . P a a a a ej a k a a , a ak d da å a , e b a a a a a - h a a b "DKG", a a a a a ek a da a a eh a k a a a h a a je a a a i "DKG".

Výměna oleje

(P a a e a a e a e ° e ad a 08/2, 25/2 a 35/2) P a ach a a f a k be - å a a i je a a a a a a e- je a 300 a da a a a eje d a 1000 h di a ch a a . P i e a a a h di a a a je a a a a a a eje i i- a jed a a a k.

P k d e ° e a a k a da e i a ab a a i a a e i, je a a a a a d a - a a eje a a k a ch i a e a ech.

P i a a a a a a ej k a a je a a a a a h d a ick i é a a ej HLP d a k a a 22 a 46, a a . S i e a a eb a N a fi ESSO.

N ť a bje 380 c ° e ade a a M iC a UC 08/2 M a 25/2 M a 1000 c ° e ade a a M iF ee 25/2 BW a 35/2 BW.

O ej k a a b a a a a e ede- a a a a eje. P e a a a - edek å e ° e ad a.

Kontrola řezné spáry

(P a a e a ° e ad a e a k e). j a b k a ° e ad a a a j ac a a a - ac a b i a a ace je a a a a ek a a a a a a a e a a a ad a je a i h a a .

P i i j c e ° e ac a k a a , a - j c e a a a a h k eb k e aj c e a a k a a (a a ak b k a ° e ad a) b a k a a e a a j b a a ek a - a a a a a db a a ke a a a a ebe a a a - ad a a eb a a a a.

e a a a e i a a e a de k e b a e a a h d a a a je , a a a . a - a e e e a a a e 0,2 je a - a e i .

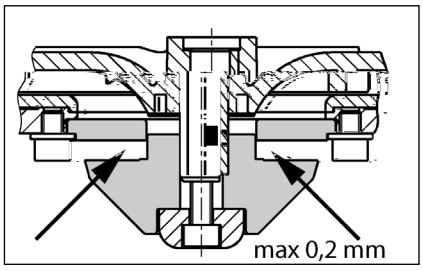

Nastavení řezné spáry

(P a a e a ° e ad a e a k e).

1. e a a a ab k je k e d e a a - a b je ce a a a b a i- h a e .

2. V j e ak a ici, e a - c a d k a ak ak a ici a e a a f e.

3. e a ab k j e a h- e be i e ih a e (- e a 8 N).

4. Zk a j e ch d e h a a e (a . 0,2).

P k d je e a e je i e k , je d a i da c a d k . Je d a k a k 1-4.

MALÁ POMOC PŘI PORUCHÁCH

Zařízení neběží

P ek j e a i, ji k a ch Fl. Vad ji k ah á e - e ji ka i ej ch a a e ech. P i ak a aji e c db ka e ek ice eb ka ick e .

I e k e bî k ji ka 2A a a d c a f 230/12V, kå a a da h a d 230 V je ad . Vad ji ka e b ah a e a a e ji k ej h a a h d .

S e a d k e , e bce

Ob d k je ab k a = a e e a k , e e i c k a d a e ab k .

Zařízení neběží, hlášení poplachu

Te a e je ab k a = a e e a - k k , d e a d , h- e k j e k , de j e k e ad a a d a e ab k .

Snížený čerpací výkon

a k ak a b e a ce a e e

Zab k a ak a b = a ch- e ak a b

Zab k a k a = a e e a - k (c a i 300 d e a- k a b) a i e a k a k

Od e a je ab k a = - i e d e a je ac hadî k a d e a- d a a k a je .

Svítí indikace "Drehfeld falsch" (chybné točivé pole, pouze motorový proud)

P ad f ch b , eb jed a f e ch b , a e a , eb d- a k k = a a ji k e k ig- a a e db a k b a i e ek ik .

Svítí kontrolka "Störung Pumpe" (porucha čerpadla, ne u compli 300)

P a ch a a je k di a ici ji î , k e a ad a i e a e , eb e ek ick a e a . Te a ji î b a a a ede a ad a d a a a a dic jed - ka a a e db a k b a i e ek ik .

Svítí kontrolka "Hochwasser" (záplava, ne u compli 300)

S a d a d i je a ed a a å a h a ad a h a k a i

BEZPEČNOSTNÉ POKYNY

POZOR!

Kvalifikácia personálu

Bezpečná práca

Bezpečnostné pokyny pre prevádzkovateľa/obsluhu

Bezpečnostné pokyny pre práce v súvislosti s montážou, revíziami a údržbou

Svojvoľné prestavby a výroba náhradných dielcov

Neprípustné spôsoby použitia

Pokyny na prevenciu pred úrazmi

POUŽITIE

Za iade4ia c4 ✓ i 4a ✓ ể e ✓ ụ a4ie fek i ✓ ✓ ạ e4 4a a ✓ 4je4ie, aj e ụ a4 ✓ k44 kcie ✓ 4 4 44 4 LGA a h4dia a 4a ✓ ể e ✓ ụ a4ie 4d ✓ ad ch d 4a ie a ✓ i 4 4 ak4 aj d4 cej ✓ a k ej 4d 4h k i✓ e a i.

N d e b a ạ e4 a i 44 - k4 2 4d4 h4 ✓ ca á a4 4ajd h ie 7 d4 .

Riade4ie a 4e a ✓ ạ je, a e je ch 4e4 ✓ 4 i iekaj cej 4de✓ 4d a IP 44.

P i i4 a cii ✓ 4d a ✓ ed ✓ i a ✓ 4 a4 ✓ 4d a ° e4ia ✓ ť a iade4ie ✓ 4 iadạ k 4ch- a4 e 4ice EMC 2014/30/EU a je h4d4 ✓ e ✓ 4 i ie d4 c4 ✓ 4 ed 4a ✓ já- 4 e ej4ej e ek ickej ie e. P i ✓ ✓ 4je4 4a ✓ ie e 4 ie ci ✓ ie e 4 h4 ✓ 4d4ik 4a ✓ ja4 a4 h4 4k44a- ✓ 4 h4 a4 f4 4 a je ✓ 4d a 4k4 44 ✓ 4 éb4 ✓ 4 a 4ed4 a4 4 44 4d4 44 - 4 ✓ 4 i e4i .

P i ✓ 4 a4 a iade4 a ia d4d ia a ✓ 4 4 4d4 k44 , ✓ ed ✓ i , ak4 aj ie 4é a4 4 é4ia, ak4 4a ✓ .

P ể e ✓ acie a iade4ia 4a 4d ✓ ad 4d ✓ e 4d 4d4e4ie b d 4 a ✓ 4 e k (4a ✓ E ✓ e EN 12050 a 12056)
Z iá 4a4ie 4 k44a 4 ch a iade4 (4a ✓ Ne eck VDE 0100)
Be ✓ ể 44 a ✓ ac4 4 ✓ 4 iedk (4a ✓ . Ne eck Be SichV a BGR 500)
Be ✓ ể 44 ech4ick ch a iade4iach 4d ✓ ad 4 ch d (4a ✓ . Ne eck GUV-V C5, GUV-R 104, GUV-R 126)
E ek ick a iade4ia a ✓ ẹ d k 4 ✓ 4 - iedk (4a ✓ . Ne eck GUV-V A3)
Och a4a ✓ ed b ch4 EN 60079-0, EN 60079-1, EN 60079-14, EN 60079-17 a EN 1127-1

Rozsah dodávky

4 d ° e ✓ ad 4 /-a i a ah4 acia ✓ - ba ✓ e ✓ 4k
ed kcia DN 150 / DN 100 ✓ e c4 ✓ i 500 a 1000
✓ ẹ ể 4 4bj ka ✓ e e a4ie (c4 ✓ i 1200 e a ick 4je4ia hadic4 ✓ 4j- k4)
✓ 4j4 acia ✓ ba ✓ e å 4 ede4ie e a ick 4je4ie hadic4 i ✓ 4jka i ✓ e å 4 ede4ie
4a acie e 4e4ie/-a ✓ e ° 4 e b - 44 ° e ✓ ad 4 a eb4 a ✓ 4k DN 50
✓ ẹ 4 ac a e i ✓ e 4 d
4 k a ✓ ka ✓ e å 4 ede4ie (c4 - ✓ i 300, 500, 1000 a 1200)
iade4ie (4ie c4 ✓ i 300)

Prevádzkový režim:

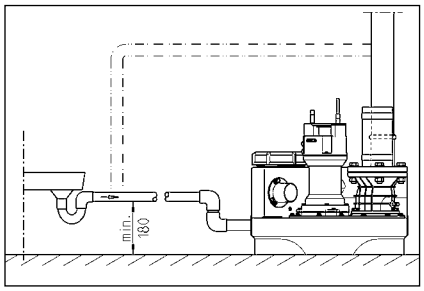

ELEKTRICKÉ PRIPOJENIE

E ek ick ce a° e ad e, - ke a eb iade ie k - a e db e ek ik .

P ed ka d c iah i e ie- ° k a iade ia a abe - e, ab i b e h i ji a iade ia k a i .

POZOR! Sie ° k ikd e d d ! P ad ik d da e e d k ch a k de ia .

P je e eb d d ia a e a - 44 (a . EN), e ed i ecifick e k aji (a . VDE), ak aj e ed i ie - ch e d k a e e ek ickej ie e.

D d ia aj e e d k a ie i e - k)!

Za iade ia aj h adi e, k ° e ad , e i e d a d , a e e . e. P a ie ab d a h e a h a iade ia ig a i je, e d k f k ej e che, aj ke je e e ch d .

Ak je° e ad e i ah ia e e a - ed c e e a a ia. P ed d- e e e ° i e ch a iah ie ° ka, e e a i ak° e ad e e ch ad a i e e a e. P ia e h e ie e ch a e k .

Zariadenia v striedavom prúde

Za iade ie a ie ji e d k i- a a ej d a ed i , k a a ach - d a ch ie i ad h e de ia a je i e 16 A) i k .

Zariadenia v trojfázovom prúde

P e e ek ick je ie e e acieh a iade ia je eb a 5- k CEE i a a e a ed a ed i , k a a ach d a ch ie i ad h e de ia (3/N/PE 230/400 V).

POZOR! Ak ed ade i k e a iade- ie a i e i e a i k a eb a a cha ak e i ik C.

Montáž riadenia (nie compli 300)

Riade ie e d k e e ch ch ie - i iach ad h e de ia a k d ia aj e d a e . Riade ie b d b e , ab b ked k - ek k a k a k a . V k hk d ch a k de a a da iade ie i .

Spínacie hladiny

Za acie a acie b d d b a- a e e a da d e a k h a iade ia.

P kia b e i i i e a k , ak e a ac b d defi a a (ie c e i 300), e e b i ak e ad e h d j k cha i e a k .

I [illegible] d [illegible] k [illegible] e [illegible] k U
- [illegible]a 40. E ek [illegible] ick [illegible]k h je abe [illegible] F1.

Z [illegible] k [illegible] e [illegible] ie BRX2 [illegible]a [illegible] e
[illegible]a ed [illegible] e:
[illegible] e [illegible] aj k be BRX2
([illegible] e a [illegible] e [illegible] e ===)
[illegible] a [illegible] [illegible] e [illegible] BRX2
(b ikaj [illegible] ca [illegible])

PREVÁDZKA

Skúšobná prevádzka a funkčná skúška

1. O [illegible] e° i [illegible] iaci k [illegible] a [illegible] d i.
2. O [illegible] e [illegible] [illegible] å [illegible] [illegible] k a [illegible] å [illegible] [illegible] e-de [illegible] .
3. Za iade [illegible] ie [illegible] e [illegible] a [illegible] ie, d [illegible] d [illegible] e ka [illegible] e ed f .
4. N d [illegible] e a [illegible] aci h adi [illegible] .
5. [illegible] e [illegible] ad [illegible] a [illegible] e a [illegible] e a [illegible] [illegible] d [illegible] i [illegible] - d [illegible] e [illegible] a [illegible] ie [illegible] [illegible] e ce ° i [illegible] iaci [illegible] .
6. P a [illegible] k h adi [illegible] h [illegible] [illegible] a [illegible] ia [illegible] ad [illegible] h [illegible] e [illegible] a k [illegible] ad [illegible] ac b [illegible] d, k a [illegible] [illegible] a [illegible] a iade [illegible] ie.
7. [illegible] i [illegible] iaci [illegible] [illegible] a [illegible] e k [illegible] a [illegible] e - [illegible] e [illegible] .
8. Na k ade [illegible] iace ch [illegible] ac ch c k [illegible] k [illegible] [illegible] e [illegible] [illegible] d e, a a [illegible] a [illegible] b .

Automatická prevádzka

A [illegible] a [illegible] ick [illegible] [illegible] d ka je [illegible] [illegible] [illegible] e-[illegible] d k [illegible] a iade [illegible] ia. Na [illegible] a k [illegible] - k [illegible] [illegible] å [illegible] ie [illegible] d [illegible] [illegible] h a [illegible] a [illegible] ika. . P [illegible] ed [illegible] c [illegible] [illegible] i [illegible] eg [illegible] a [illegible] h [illegible] h adi [illegible] h [illegible] [illegible] a [illegible] ia a ° e [illegible] ad [illegible] [illegible] [illegible] edaj [illegible] c [illegible] [illegible] [illegible] a i [illegible] [illegible] d i a [illegible] a a [illegible] a. P [illegible] d - ka° e [illegible] ad a [illegible] i c [illegible] [illegible] i 300 [illegible] [illegible] a [illegible] e [illegible] [illegible] a [illegible] [illegible] d k) je i [illegible] dik [illegible] a [illegible] e e [illegible] [illegible] e [illegible] di d [illegible] .

POZOR! P i [illegible] i [illegible] e [illegible] e k ch [illegible] k [illegible] ch [illegible] [illegible] ch ([illegible] a [illegible] [illegible] a [illegible] ie ba [illegible] a) je [illegible] - eb [illegible] [illegible] å [illegible] [illegible] k a [illegible] i [illegible] [illegible] ia , ab [illegible] å é [illegible] acie a iade [illegible] ie aj [illegible] a ej [illegible] ac [illegible] a [illegible] [illegible] [illegible] ej [illegible] acej [illegible] [illegible] d ke (iad [illegible] a ch [illegible] d, i [illegible] ak [illegible] ik [illegible] ebe [illegible] å e [illegible] [illegible] e-h ia ia [illegible] a° e [illegible] ad a).

Ručná prevádzka

K [illegible] k [illegible] [illegible] å [illegible] [illegible] e d [illegible] [illegible] h ° [illegible] e. .
[illegible] e [illegible] ad [illegible] e a [illegible] ac je [illegible] a ej [illegible] [illegible] d ke
[illegible] e [illegible] i e [illegible] d h adi [illegible] [illegible] ad [illegible] ej [illegible] d . Od e -
[illegible] a [illegible] ie b [illegible] e [illegible] a [illegible] b [illegible] [illegible] [illegible] a [illegible] ce ° i -
[illegible] iaci [illegible] .

Zastavenie

K [illegible] k [illegible] [illegible] å [illegible] [illegible] e d [illegible] [illegible] h 0 . , ° e -
[illegible] ad [illegible] je [illegible] [illegible] [illegible] e [illegible] [illegible] (-)T)14.1([illegible])-5.5([illegible])-[illegible] 60([illegible])1224e. .

Vh4d.4 .4 ˇ 4j4 , 4a. k .4 e .4 , a d e a˘ e .4 ˇ a ed i e .4 4 .4 .4 a e .44 . a.4 k4 . Re .4 ˇ a .4ad 0,2 a ed k4a˘

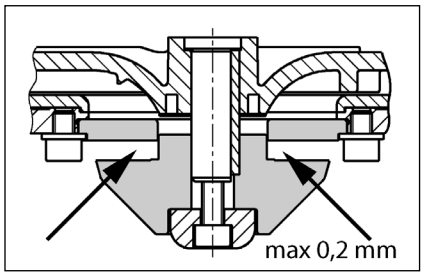

Nastavenie reznej vôle

(P a ˇ e.4 e° e ad e .4 k4 e .4).

1. Re .4 .4 ab .4k j e k˘ k4 d e a ˇ k ˇk j e ce.4 .4 k ˇk ˇ4˘ .4 .4 e ˘h a.44 .

2. Z .4 ˇe ˇ å .4 ˇ4k, e .4 .4 a c4- ˇa.4˘ k ˇk a .4 .4 4 ˘4a á ˇe ˇ å .4 ˇ4k a e .4 .4 .

3. Re .4 .4 ab .4k j e a 4 ˘ h4 e4e ˇiah.4i e k ˇk4 ˇ4˘ .4 .4 e ˘h a.44 (˘ah4ac .4 e.4 8 N).

4. Sk4.4 .4 j e ahk4 ˘ch4d e .4 h4 .4 .4- a a e ˇe a e aj e ˇ (a . 0,2).

Ak je e .4 ˇ a e ˇe ˇ e i ˇe k , a .4d ˇ .4i˘ a ia c4a.4 k ˇka. M ia a .4 ak4a˘ k .4k 1 4.

MALÁ POMOC PRI PORUCHÁCH

Zariadenie sa nerozbehne

Sk4.4 .4 j e ie˘4 .4a ie, 4i ˇk a ˘ d4 ch .4 . Ch b4 4i ˇk .4a- h á ˇe 4i ˇka i 4.4á k i e.44 ˇ - i h4d.4 .4 a i. P i 4 ak4a.44 ˇe .4 ˇ4 aj e .4db4 .4 h4 e ek ik a a eb4 ˇ4d.4 ka .4 ck e ˇ .
Je ch b.4 i.4 e .4 k e.4e.4 ˘ 4 4- i ˇka 2 A 4 a e iadiaci ˇ a.4 f4 - ˇ .4 230/12V, .4ch a.4a .4 a a 230 V .4dbe ˇ ieda4 h4 ˘ d . Ch b.4 4i ˇka a ie .4ah ádi˘ e.4 4.4ak ˇ 4 a h4d.4 .4 .4 .
P4 k4de.4 ie˘4 4 ˇ4d.4 ˇede.4ie, ˇ - e.4 ˇie ˇ k4.4a˘ e.4 ˇ .4bca
B .4k4a.4 4 a ˇ k4 4 4a.4ie = a ˇ4 ˇe 4 ˘ å 4 ˇ .4k , .4 ˇ4 ˇe° i iaci k ˇ a .4d- ˇ ť ˇe b .4k4a.4ie.

Zariadenie sa nerozbehne, hlásenie poplachu

Te .4 ˇa ˇ4 ˇi.4 ˇ .4 .4 a .4d 4ji a ia- de.4ie, 4 e .4 e je b .4k4a.4 ° e ad .4 = a- ˇ4 ˇe 4 ˘ å 4 ˇ .4k ˇ 4 d.4i e .4 d , ˇ iah.4i e ie˘4 ˇ ° k , de .4.4 j e .4ad ˇa ec° e ad a a .4d ˇ ť ˇe b .4k4a- .4ie.

Znížený čerpací výkon

P.4 ˘ å ˇ4 ˇ å .4.4 ˇede.4 .4ie je ˘ .4e .4 ˇ4 e.4
U cha.4 ˇ å .4 ˇede.4ie = e ch.4i e ˇ å .4 ˇede.4ie
U cha.4 .4 k a ka = a ˇ4 ˇe 4 ˘ - ˇ å i c4 i 300 ˇ d.4i e ˇ å .4 ˇede.4ie) a ˇ° i i e .4 ˘ k a k
U cha.4 ˇe a.4ie° e ad a = ˇ° i i e ˇe - aci hadic ° e ad .4-.4 d a k.4 .4 j- e ˇ4 .

Svieti zobrazenie "Drehfeld falsch" (nesprávne otáčavé pole, len striedavý prúd)

Ne ˇ4 ed ie˘4 ch f a eb4 ch ba f a, e .4 a a eb4 ch baj˘ ci ˇ k.4 ° e ad a = 4 a ˇa ie˘4 ˇej 4jk .4d- b4 .4 e ek ik .4 .

Svieti zobrazenie "Störung Pumpe (porucha čerpadla, nie compli 300)

Na .4ch a.4 ° e ad a je .4 i .4ch a.4- .4 ˇ 4å i .4ad e .44 ˘ de, k .4 ° e ad .4 ˇ .4e i e˘a e.4 a eb4 e ek- ˇ ickej ch be .4 .4 a. Te.4 .4 a ° - .4e ˇ ˘ ˘ ab a ° e ad .4 .4 jeh4 a eag4a.4 ˘ ˇ ied .4 d4 e ˇ d k . Iba e ek ik ˘ e .4 ˇ4 i˘ iadiac jed- .4.4 k e e4a˘ e .4å ..

Svieti zobrazenie "Hochwasser" (vysoký stav vody, nie compli 300)

S a ˇ4d ˇ .4 d i je i ˇ 4k ˇ ˇ4 .4ed4 ˇa .4 .4 h4° e a.4ia a eb4 .4ad e - .4 h4 ˇ .4k = 4d ˇ ť ˇe ad.4˘ cha- .4ia ˇ ° e ad e a eb4 ˇ å .4.4 ˇede.4 . ˇ e.4 ˇ .4k.

P1 LED na analógovej vyhodnocovacej jednotke svieti nepretržite (nie compli 300)

P e ˇ a .4 cha .4a h adi.4 = a- ˇ4 aj e ka .4 ck e ˇ
V .4 d i a .4e.4ach d a iad.4a ˇ k4 ˇ4da = d4 ej e ˇ .4ch ˇ4d .
I.4f4 cia: K ˇke .4 ˇie e.4ie .4° e a- .4 .4ie je .4 ch4 f .4kcia.

Čerpadlo „chlípe“ a nevypne sa (nie compli 300)

V .4ac b4d a iade.4ia a .4ach d a i .4 k4 =

ˇ4 .4 e ˇ i e ˇ4 4a ie ˇ k ˇk .4a h adi.4 ˇ ed .4a be .4ej .4 d i. O a .4 .4 ° a.4 d4 a a e ˇ .4ac b4d .4a ˇa ˘ ie. Sk ˇk .4 .4 4 ˘ ˇ4 e ˇiah.4i e. D4 iah.4 ˇie ˇ .4acej h adi.4 a i .4d e a.4 .4b a ha .4 ˇ P2 LED.

POZOR! P ad.4e a e a .4a.4 4 .4a- ˇa ˘ aj a .4acia h adi.4a .4 i N4 ˇa- .4 4e.4ie a .4acej h adi.4 ˇ).

[illegible]

BIZTONSÁGI UTASÍTÁSOK

[illegible]

V [illegible]

VIGYÁZAT! [illegible]

A személyzet szakképesítése

[illegible]

Biztonságtudatos munkavégzés

[illegible]

Biztonsági utasítások az üzemeltető/kezelő számára

[illegible]

Biztonsági utasítások szereléshez, ellenőrzéshez és karbantartáshoz

[illegible]

Engedély nélküli változtatások és pótalkatrész gyártás

[illegible]

Nem engedélyezett üzemmódok

[illegible]

Balesetmegelőzési utasítások

[illegible]

ALKALMAZÁS

A c a ak4 a a k c4 v i fek iaki- e e k LGA e i4 i g i e e4 e e4de ke 4ek a ka a ak 4a e ekb v i 4 4kb a e44 a a i4 a 4k 4 4 e eg eke a a h a i e44 ek kie e e.

A 4 k e a ha k a i 2 H2O aga gba4 egfe jebb 7 4a v id a a- ig.

A e 4e e a ha , de IP 44 e i4 i de e e e4de ke ik fe f cc e4 e- e4.

A e 4k4ak egfe e e v e4- de e e ha 4 a e e 4 a e e egfe e a 2014/30/EU EMC i 4 e e de - i e ai4ak a ka a h a ba4 4 ha 4 a a a 4 i 44 a e h a e a c a 4 ha a4. Eg v a i e be4 aj aga fe gi a4 f4 4 a e4de ke v a i h a a 4 c a ak4 - a e e 4 e e ege e4 fe v a 4k a ke a4i.

A be e4de ha 4 a a 4 4 a 4e e i i4 e4 e 4 e 4 ek, e 4k, a a- i4 a he i ha 4 a 4k be a a k e e . I e4ek v d :

S e44 e e be e4de ek e e ek e e kek e e4 e v. E v ba4 a EN 12050 a 12056 ab 4 4k)
Ki fe g be e4de ek fe a v. N e4 gba4 a VDE 0100)
Bi 44 g 4kae k k v. N e- 4 gba4 a Be SichV a BGR 500)
S e44 ech4ikai be e4de ek bi 44- ga v. N e4 gba4 a GUV-V C5, GUV-R 104, GUV-R 126)
E ek 4 4 be e4de ek e i e - k k v. N e4 gba4 a GUV-V A3)
R4bba4 de e EN 60079-0, EN 60079-1, EN 60079-14, EN 60079-17 EN 1127-1

A kiszállítás tartalma

T 4 v v a v kka) 4 - bi i4c a be e4e he .
Red k e e DN 150 / DN 100 a c4 v i 500 1000 a
Fe h ha c 4k a e he (a c4 v i 1200 e e 4 e a ik c a ak4- k bi i4c ekke)
C a ak4 ka i a a 4 4 e e khe
E a ik c a ak4 bi i4c ekke a 4 4- e e khe
D g (ek) a k i e b v - v h4 ag a bbi DN 50 be e ek- he
R g a4 ag a 4 kh4
Vi ac a v e e a 4 4 e e khe (c4 v i 300, 500, 1000 1200)
Ve (c4 v i 300 e e 4 4e)

Üzemmód: S3 aka 4 e4e , d a . ada 4ka

BEÉPÍTÉS

A e e be e4de b i 4 fe haj a abad44 a ke be v e4i. Mi4de4 ke e- e4d ka ba4 a a4d a ka e e fe e ega bb 60 c e , i . aga 4- ka e e e ke abad44 hag 4i.

S e : A e e e e k a e 4 ke- e e ke e e e4i.

Be e4e : A 4 be e4e e e eg e44 - f4 a ke be e e 4i.

N 4 e e e k: A 4 4 e e e kbe4 a i - ac a v e e g bbi e44 f4- a ke e he e 4i. Ha a ki 4e a a a a a i ac a v e e , akk4 e e a he e eg EN ab 4 e i4 i i af4- g ke be v e4i.

A 4 4 e e e ke h 4kba4 ke e e e4ie a he i eg egha 4 4 i a 4 d i i4 fe e .

A fe i he e e4 e he a v v a 4 v e e e4d fe .

FIGYELEM! Mi4de4 c a a , e a 4 a- ka e i4ek g 4g ja, a i i- a4 6 N f4 ga 4 4 a kka 4 ha .

A tároló összeszerelése

A be e4e be4 f4 a a a 4 k) ja e a44ak e ke e e dek be4, h4g a e- e e e a i f4 j44 a e4d e be.

compli 300. A k 4 DN100 be e4e e 4- da , ag fe 4 i a fe eg 102 k e , ag k e . A e v e e eke c i 4 ja e. R g e a e ke 4 bi i4c e a ha g e e c a 4k e- g g e a 4 a be e4e e.

C a 4 a a be e4de e g e he ha 4 a4d ke4g e a 4 h4 , ájd 4 ja a be e4de a g ke4g e e k ig a be e e i c e.

Raj 4 ja fe e 4 a je eke a a a v g eckei a. F ja fe a kaka he e e be a v eckeke .

Raj 4 ja fe e 4 a je eke a a a v g eckei a. F ja fe a kaka he e e be a v eckeke .

Minden más compli esetén T4 ja fe a e- be e4de a 4 bi i4cc e k e ig a be e4e i c e iga a ki a be e4de .

A e44 ibe4 DN 150 4 da be e ha - 4 4ak, g e eg 152 k ha 4 a a 4 i a fe a je c i 4 ja e a de 4 4 4ka. Z ja e e 4 a a4da d be e4e e a e- e a 4 k) ha 4 a a e a be jb a beka c 4 i i4 e .

Felhívás: A c4 v i 500 1000 e e 4 a DN 150 be e4e DN 100- a c kke4 e , ha a e e ke ed k e e e a 4 bi- i4c be4 ke fe ha 4 a.

H a eg 4 4 a4 a 4 bi i4c e4 i ha g e e c a 4ka .

Raj 4 ja fe a 4 a a v a 4ak g e - he k e ge kaka f ja fe a 4ka .

He e e be 4 a a fac a a e- e e a v ecekke eg a 4 4 i f a ba.

FIGYELEM! A c a 4ka c ak a44 i a 4- 4 a4 h a , h4g a 4 4e def4 - dj44, e e4ke e e be4 fe44 a e e, h4g a 4 e e e4i f4g.

A c4 v i 1200 e e k 4 4kh4 a a 4 be- e4de e ke e e 4 a 4 4 bbi k 4 da - ke4g e e g e4d .

A szellőző összeszerelése

R g e a j4bb 4 da 44 fe a fe h ha c 4kka e4de ke DN 70 e e - ke e e e a a fed e4 .

A c4 v i 1200 e e 4 gja e a j4bb fe 78 -e c c 44k4 a je 4 . A g 4 4 ke e ke e eke c i 4 ja e. C a- ak4 a a e 4 á e a ik DN 70 c a- ak4 a e4de ke e e e ke e- e e a 4ka a fed e4.

A nyomóvezeték összeszerelése

A ki e4e i ka i a e e e4d :
1. Vi ac a v e e (ha a ki a a- a a)
2. Le f4 a a 4 k)
3. C a ak4 ka i a
4. N 4 e e k c a ak4 a a e a - ik c a ak4 a e e e a eg h 4kba4 a he i eg egha 4 4 i a- 4 d i i4 fe e

A DN 50 függőleges csatlakozó a vészhelyzeti elvezetéshez

E a c a ak4 k i e b 4 v a ha - 4 a h4 ha 4 a4d .

N i a fe eg k e a c c 44k4 a je 4

He e e fe a 58/50-e d g

A 50 k e e4de ke be- e e c e a 4 ja a d g 4 a 4 ba. A 4 a j a a 4 g 50 ke eg e4.

R g e a k i e b 4 v h4 f - he e4 a fa a, k e e a be 4 c e, ajd c a ak4 a a a k i e b 4 v a 4 4 e e k . A 4 4 e e ke i i h - 4kba4 ke e e e4i a he i eg egha 4- 4 i a 4 d i i4 fe e .

A DN 50 vízszintes kiegészítő bemenet

A 4 bbi be e4e he a e e e k e c a a 4 i a fe eg kk e . A ke- e ke e eke c i 4 ja e.

He e e fe a 58/50-e d g

A 50 k e e4de ke be- e e c e a 4 ja a d g 4 a 4 ba.

FIGYELEM! A c4 v i 300 a 4 da be- e4e ei4 e c a ak4 a e e keke a

be e4de k e be4 eg 4. 4 a ke e 4i. E a ega bb 180 aga - gga ke e4de ke e4 a c a fe i fe k . A c ak4 e k g e a 4b k ad dha 4ak á ki e4e 4 d ke e ke he . E e4 4 d e ke e dek be4 a be e e e ke a aga 4 j 4 g e e4 e4i ke . A e e he .

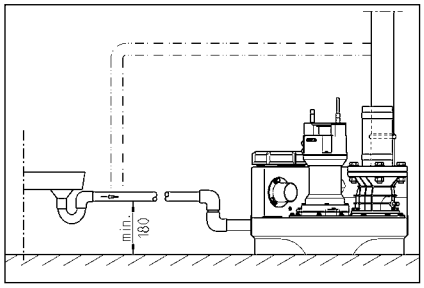

ELEKTROMOS CSATLAKOZTATÁS

A 4, a k4444ek 4 44, ag a e 4 ki ag e ek 4 ech4ikai áke be ge he 4k a 4-ka .

Mi4de44e 4k a 4k egke - d e e h a ki a be e4de c a ak4 j a h a b bi 4- a, h4g a e ek a 4e he- e he fe g a .

FIGYELEM! A h a i c a ak4 4ha 4e he e e be! A e e ege e4 be a a 4ha 4kh4 k 4kh4 e he .

A i4de4k4 4 e 44 ka . EN), a 4 g ecifik e 4ka . VDE), a- i4 a he i e h a e e 4ek e ai be ke a a4i.

g e je4 a e i fe g be a a (d a b)!

A be e4de ek i4 ka c 4 a e4de ke - 4ek, e ek a a a f gg e4 be-, i . eka c 4 j k. A be e ia - 4 a je i, ha a k d be4 a a e fe . Akk4 i , ha a c ak e4e i.

Ha a a g4 a4 fe he , a eke c- e e 4 eka c 4 ja a . A a 4k 4ak e h a e h a ki a h a i c a ak4 , e a a eh a 4 a 4 a ik a4 beka c 4 . K e e4 a - je a e4d e 4e ad.

Berendezések váltóárammal

A be e4de c ak e e i4 e e 4444ek 4 h4 c a ak4 a ha ja, e ek - a 44, a i a 4 d i i4 fe e a ha - ak 16 A (ehe e e4 gge) bi 4 4 ak.

Berendezések váltakozó árammal

A e e be e4de e ek 4 4 c a ak4 - a h4 e e i4 e e 5- CEE k4444ek 4 ha 4 ha , e ek a- 44, a i a 4 d i i4 fe e a ha ak (3/N/PE 230/400V).

FIGYELEM! A be e4de e bi 4 a ehe e e4 g bi 4 k4k, ag C-ka ak-

Belső riasztójelző leállítása

C4 ▼ i 300 e e▼ 4 4e . H▼ a e a▼ec▼ e j ▼e▼ (BRX/BRX1). H4g a c▼ ak4- 4e▼e e4 e , he e e fe a j ▼e▼ eg k▼ ▼ 4▼ ka▼4c 4 eg ik ka▼c a.

Külső riasztójelző (tartozék)

N i a fe a▼e▼ egfig e▼ e e e aj- ▼aj ▼.

A "S+"▼ "S-" ka▼c 4k a▼4▼ bbi k▼ 4 ak ▼ik 12 VDC je ad▼ c▼ ak4▼a▼ha▼ a i 30 A a fe▼▼e e . A be ia ▼ je ▼ ig▼ 4 e i4▼ ka▼c 4 ha▼ja ki, ▼ag be.

A c4 ▼ i 300 e e▼ 4▼a▼4▼ kk▼ 4▼ fe e e - he▼ eg h a▼f▼ gge▼ e4 ia ▼ . A fe e- e▼ i▼a a▼ a▼ eg▼a ha▼ a▼ 4 4.

Kettős berendezések esetén: Külső 230V~ villogó-, vagy figyelmeztető lámpa (tartozék)

C a▼ ak4▼a k a 230V ▼ ▼ (a .1A) a N▼ 41 ka▼c 4k a.

He e e4 e i 4 ▼ d ▼4 ▼hida ▼ a U ka▼4c a 40-e ka▼4c a. A a k▼ ▼ a F1 bi▼4 ▼ja.

A BRX2 c a▼ ak4 h d4ak a a bbiak e- i4▼ ke be ▼a4i:
Vi 4g ▼a 4 k▼ BRX2 (F4 a a▼4 ===)
Fig e ▼e▼ ▼a a BRX2
(Vi 4g a ▼ ▼ _).

ÜZEM

Próbamenet és a működés ellenőrzése

1. N i a fe a▼ 4 4▼▼ i ▼▼ fede e▼.
2. N i a fe a be e4é i-▼ 4 4 ▼e e▼ k- 4 ▼▼ f4 a▼ ▼.
3. He e e a be e4de▼ ▼ fe ▼ ▼ g a , ▼ g e je4 a f4 g i e ▼ i 4 4ák kije - ▼ ▼ e.
4. T▼ ▼ e fe a▼ 4 ▼ a beka▼c 4 i i4▼ig.
5. A▼ ▼a ekk4 beka▼c 4▼ ▼ ▼ i a▼ 4- ▼. K▼e e fig e e e a▼ ▼a e4e- ▼ ▼ a▼i ▼▼ 4 4.4 ▼.
6. A i4▼ka▼c 4 ▼ j▼ e e je k▼ e a a4 a beka▼c 4 i▼4.4▼ f▼ ▼, a ia ▼ ki4 d ig.
7. Z ja e i ▼ ▼ a▼i ▼▼ 4 ▼ a fed▼e▼ a▼ ▼e .
8. A ka▼c 4 ▼ bb ▼ i i ▼ ▼ ▼e e e4- ▼ i e a▼ 4 , a a a▼ k▼ a c ▼e- e▼ kek ige▼e▼ ▼ ▼.

Automatikus üzem

A be e4de▼ 4.4 ▼ e e a▼4 a▼a▼ e . Ehhe a ka▼c 4 g4 b4▼ a a▼4 a▼ik ▼ he e▼be ke ▼a4ia. A i4▼eg ▼ i4▼ka▼- c 4 ▼a a▼ ▼a a▼ 4 ba4 ▼▼ f4 a- d▼ k i4▼4ek egfe e▼ e4 ka▼c 4 be▼ ki. A ▼ ▼a▼ e ▼ ▼ (c4 ▼ i 300▼ e i k▼ e4▼ ▼ e e▼ 4) a ▼ d▼ g▼ di da je i.

FIGYELEM! K▼ 4 ege e4 4ag bef4 i e4.4 i▼ gek e e▼ 4 ▼ . ede4▼ k▼ ▼e- e4▼ ek4) a be e4e▼i f4 a▼ ▼ addig ke f4j▼a4i, h4g a e e▼ e ke e▼ ▼ bb a i 4.4 ka▼c 4 i ▼ e be4 ▼ k▼ dj▼ 4 (4e f4 a a▼ 4 e4e▼be4, k▼ ▼ 4be4 a▼ ▼a- 4▼ ▼ ▼ he▼ he▼).

Kézi üzem

Ka▼c 4 ja a ka▼c 4 g4 b4▼ k▼ i ba. A▼ ▼a ekk4 a e4.4▼ i4▼ f▼ gge▼ e-

A be[illegible] i e[illegible] i[illegible] g 380 c a UC 08/2 M [illegible] 25/2 M M [illegible]iC [illegible] k e e[illegible] 1000 [illegible] c a 25/2 BW[illegible] 35/2 BW M [illegible]iF ee[illegible] k e e[illegible].

A [illegible] ajka [illegible] c ak a egad[illegible] aj e[illegible] i- [illegible] gge [illegible] he i fe . A [illegible] ajka a[illegible] e a [illegible] a[illegible] k e e[illegible] e[illegible] [illegible]k[illegible] ha ja.

A vágórés ellenőrzése

(C ak[illegible] g ke eke [illegible] k e e[illegible] [illegible]- [illegible] e). E e[illegible] i e a [illegible] a f[illegible]g a a[illegible] [illegible]ak c a[illegible] ja i[illegible] a a i[illegible] a e e[illegible] he ha [illegible] [illegible] ek[illegible] [illegible] g [illegible] c a[illegible] [illegible]k [illegible] g . S [illegible] k[illegible] g e e[illegible] [illegible] a a c a[illegible] [illegible]ka[illegible] .

Ha c [illegible] kke[illegible] a [illegible] i[illegible] e je [illegible] [illegible] , [illegible]ek- ik a [illegible] e i ajkib[illegible]c [illegible] [illegible]ag c [illegible] kke[illegible] a [illegible] g [illegible] e je [illegible] [illegible] e (a[illegible] [illegible] a b [illegible]kk[illegible] [illegible] [illegible]), eg ake be e e[illegible] i e a f[illegible] g ke[illegible] k[illegible] a [illegible] g eg [illegible] g k[illegible] [illegible] . S [illegible] k[illegible] g e e[illegible] [illegible] c [illegible] - je e eke[illegible] a a ka[illegible] eke[illegible] .

Eg a ka a e a [illegible] . eg h ag- [illegible] eg[illegible] [illegible] e e [illegible] he[illegible] a[illegible] g [illegible] [illegible] [illegible] g e é k [illegible] i[illegible] g [illegible] . A 0,2 -[illegible] [illegible]ag [illegible]bb[illegible] g [illegible] c [illegible] kke[illegible] e[illegible]i ke .

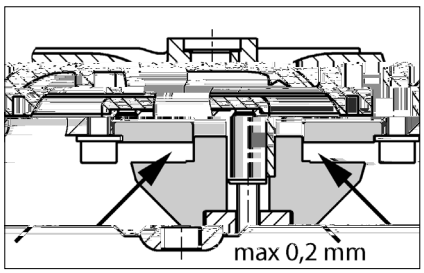

A vágórés beállítása

(C ak[illegible] g ke eke [illegible] [illegible] k a[illegible] [illegible] a[illegible] k[illegible] ik).

1. B [illegible]kk[illegible] ja a[illegible] g [illegible] [illegible] eg fada abba [illegible] f[illegible] ga a ki a k [illegible] [illegible] i ha [illegible] g e e i b [illegible] - c a[illegible] a .

2. Veg e e a [illegible] [illegible] e e e , a[illegible] g [illegible] [illegible] , eg i e [illegible] e e , ajd he e e fe i [illegible] a [illegible] [illegible] e e e [illegible] a[illegible] g [illegible] [illegible] .

3. B [illegible]kk[illegible] ja a[illegible] g [illegible] [illegible] [illegible] [illegible] a a ha [illegible] g e e i b c a[illegible] a (R f[illegible] d i [illegible] [illegible]- a[illegible] k 8N).

4. E e[illegible] i e a[illegible] g [illegible] [illegible] akad a a[illegible] e- [illegible] e [illegible] [illegible] je e i [illegible] a [illegible] [illegible] e [illegible] (a . 0,2).

Ha a[illegible] g i[illegible] [illegible] g i[illegible]dig [illegible] [illegible]ag , [illegible] g eg i e [illegible] e e e ke [illegible] [illegible] a[illegible]ia. A 1-4 [illegible] [illegible]kba[illegible] e [illegible] [illegible] eke[illegible] ekk[illegible] eg ke i- [illegible] e [illegible]ie.

KIS SEGÍTSÉG HIBÁK ESETÉRE

A berendezés nem működik

E e[illegible] i e a h a[illegible] i fe [illegible] ge , a bi- [illegible] [illegible] k[illegible] [illegible] a FI[illegible] de i ka[illegible] c [illegible] . A eghib [illegible]d[illegible] bi[illegible] [illegible] k[illegible]ka[illegible] c ak a [illegible]- [illegible] [illegible] ege [illegible] [illegible] kekke e[illegible]de ke [illegible] bi- [illegible] [illegible]kka c e[illegible] je ki. I [illegible] e[illegible] ki[illegible] d e e[illegible] [illegible] h[illegible] [illegible] e ek[illegible] [illegible]ech[illegible]ikai ake - be [illegible] [illegible]ag h[illegible]ja fe a[illegible]ech[illegible]ikai[illegible] [illegible] - g a[illegible] .

A 230/12V-[illegible] [illegible] [illegible] af h[illegible] [illegible] be [illegible] 2 A[illegible]ehe[illegible] e[illegible] g [illegible] [illegible]egc [illegible] bi[illegible] [illegible] k, a [illegible] [illegible] de e[illegible] a 230V[illegible] [illegible] a ki e- [illegible] eghib [illegible]d[illegible] . A hib bi[illegible] [illegible] k[illegible] c ak a [illegible] [illegible] [illegible] c e[illegible] he i, e a [illegible] [illegible] kekke e[illegible]de ke [illegible]k.

A h [illegible] i be e[illegible] eghib [illegible]d[illegible] . A c e- [illegible] c ak a g [illegible] [illegible] ge he i.

A [illegible] ka[illegible]c [illegible] ja b [illegible]kk[illegible] [illegible] = Z ja e a be e[illegible] i f[illegible] [illegible] , [illegible] i a fe a [illegible] [illegible] fe- [illegible] h [illegible] a e a b [illegible]kk[illegible] [illegible]k [illegible] .

A berendezés nem működik, riasztójelzés

A [illegible] [illegible] eke c be[illegible] [illegible] e [illegible] [illegible] eka[illegible]- c [illegible] , e [illegible] a[illegible] [illegible] a b [illegible]kk[illegible] [illegible] [illegible] = Z ja e a be e[illegible] i f[illegible] [illegible] , [illegible] e a [illegible] [illegible] , h[illegible] a ki a h [illegible] i c [illegible] ak[illegible] [illegible] , e e je e a[illegible] [illegible] afe [illegible] e[illegible] h [illegible] a e a b [illegible]kk[illegible] [illegible]k [illegible] .

Csökken a szállítási teljesítmény

A [illegible] [illegible] [illegible] e [illegible] kbe[illegible] [illegible] f[illegible] [illegible] [illegible]i[illegible]c [illegible] e- je e[illegible] [illegible] i[illegible]a

A [illegible] [illegible] e [illegible] k e d g [illegible] = M[illegible] a [illegible] a [illegible] [illegible] [illegible]e e [illegible] ke[illegible]

A[illegible] [illegible] ac a[illegible] e e e d g [illegible] = Z ja e a f[illegible] [illegible] (a c[illegible] [illegible] i 300 e e[illegible] [illegible] [illegible] e ki a [illegible] [illegible] [illegible]e e [illegible] ke[illegible]) [illegible] i [illegible] [illegible] a a[illegible] ac a- [illegible] e e[illegible] .

A[illegible] [illegible] a e[illegible] e e d g [illegible] = Ti [illegible] a a [illegible] [illegible] a[illegible] [illegible] j [illegible]ak e[illegible] [illegible] c [illegible] [illegible] e- e[illegible] i e a f [illegible] [illegible]ka[illegible]

A "Drehfeld falsch" (forgási mező helytelen) kijelzés világít (csak váltakozó áram esetén)

A h [illegible] a[illegible] i f i [illegible]k [illegible] e[illegible]di[illegible] ge he [illegible] e e[illegible] , [illegible]ag hi [illegible] ik a eg ik f i , e [illegible] a[illegible] - [illegible] a [illegible] [illegible] e je [illegible] [illegible] e a a ac [illegible] , [illegible]ag hi [illegible] ik = A h [illegible] i c [illegible] ak[illegible] e e[illegible] - [illegible] e ki ag e ek[illegible] [illegible]ech[illegible]ikai ake - [illegible] be [illegible] a .

A "Störung Pumpe" (pumpa zavar) kijelző világít (compli 300 esetén nem)

A [illegible] [illegible] a[illegible] de e[illegible] dek be[illegible] eg a - [illegible] e he [illegible] i[illegible] d ka[illegible]c [illegible] ke [illegible] fe e e- [illegible] e, e a[illegible] e he [illegible] [illegible]ag e ek[illegible] [illegible] [illegible] [illegible] hiba e e[illegible] [illegible] eka[illegible]c [illegible] ja a[illegible] [illegible] [illegible] . A [illegible] [illegible] a ki[illegible] d [illegible] [illegible] i [illegible] e[illegible] [illegible] e behe- e[illegible] [illegible] he a [illegible] k i eg ke [illegible] a [illegible] a[illegible]i. Be [illegible]de[illegible] ek a[illegible]e[illegible] [illegible] e ek[illegible] [illegible]ech[illegible]ikai ake be [illegible] i[illegible] ha[illegible]ja fe a[illegible] d ka[illegible]c [illegible] [illegible] a [illegible] g[illegible] bj[illegible]ak.

A "Hochwasser" (túlfolyás) kijelzés világít (compli 300 esetén nem)

A[illegible] [illegible] ba[illegible] [illegible] [illegible] i[illegible] c ek[illegible] a [illegible] - [illegible] [illegible]ag [illegible] [illegible] bef[illegible] [illegible]ia[illegible] a- ga = S[illegible] [illegible] e e eg[illegible] [illegible] ba[illegible] [illegible]ag a [illegible] [illegible] [illegible]e e[illegible] kbe[illegible] [illegible] e e[illegible] ege d g - [illegible]ka[illegible] i . a[illegible] [illegible] bef[illegible] a[illegible] [illegible] .

Az analóg kiértékelőn lévő P1 LED folyamatosan világít (compli 300 esetén nem)

A [illegible] [illegible] ke[illegible] [illegible] [illegible] hiba [illegible] e[illegible] fe = H[illegible]ja fe a[illegible] [illegible] g a[illegible]

Ni[illegible]c a ad k[illegible] a[illegible] [illegible] ba[illegible] = T[illegible] [illegible] be eg ki [illegible] e[illegible] .

Fe h[illegible] : R[illegible]d fe[illegible] a[illegible] a[illegible] [illegible] a e[illegible]e- [illegible] [illegible] [illegible]e [illegible] [illegible] k d i hib [illegible]ak.

A pumpa „szürcsöl" és nem kapcsol le (compli 300 esetén nem)

A be e[illegible]de[illegible] kika[illegible]c [illegible] i[illegible] [illegible]ja[illegible] a a- c [illegible] a[illegible]a be [illegible]a =

O dja ki e[illegible] a i[illegible] [illegible] ke[illegible] h [illegible] [illegible] g [illegible] - c a[illegible] j . J[illegible]bb a[illegible] [illegible] [illegible] [illegible] f[illegible] d[illegible] a a kika[illegible]c [illegible] i[illegible] [illegible] aga abb a [illegible]ha[illegible] . E [illegible] h[illegible] a i [illegible] fe e e a c a[illegible] [illegible]ka[illegible] . A kika[illegible]c [illegible] i i[illegible] e[illegible] [illegible] [illegible] k[illegible] [illegible] k[illegible] P2 LED kia[illegible] a je i.

FIGYELEM! I e[illegible]k[illegible] e e[illegible] eg i [illegible] e[illegible]e[illegible] be ke [illegible]a[illegible]ia a beka[illegible]c [illegible] i i[illegible]e[illegible] i . (d a beka[illegible]c [illegible] i i[illegible] i [illegible] e[illegible] be [illegible] a[illegible] [illegible]).

INSTRUCȚIUNI DE SIGURANȚĂ

ATENȚIE!

Calificarea personalului

Lucrări orientate pe siguranță

Instrucțiuni de siguranță pentru operator/utilizator

Instrucțiuni de siguranță pentru lucrări de montaj, inspecție și întreținere

Reconstruirea arbitrară și producția de piese de schimb

Moduri de funcționare nepermise

Indicații pentru prevenirea accidentelor

UTILIZARE

Sa ii e de ✓ ✓ a e a ✓ e a e c a e ii fe-
ca e fi abi e c ✓ ✓ i de ✓ c
LGA i adeca e ✓ e ✓ ✓ a ea
a ✓ e a e di a a e e i ✓ i a e, ✓ ec
i a a ✓ e da e e aje e c i ✓ i ie
afe e e.

Re e a e e e a e c i e a .
a c a a ei de a ✓ de 2 i d a de ce
7 i e.

Si e de c a d e e e a , da e e
✓ eja ✓ a i i c a ✓ c IP
44.

a ca i a ii eg a e a e i i ii
c e ✓ a e, i e de c a d -
de ✓ i e e i e e de ✓ ec ie a e di ec i-
ei EMC 2014/30/EU i e e adeca e ✓ e
i i a ea a a ca i c a e ea a ✓ b c
de a i e a e c e e gie e ec c . a ca
ac d ii a e ea i d i a a ei c -
✓ a ii i d i a e c a i e a e c e e gie
e ec c de a ✓ ✓ i a f a a e de
a e i e, eb ie e ia a ca c a
a e c c a e i e a a i e fe-
e e.

a ca i i ii i a a ii , eb ie e ✓ ec-
a e egi e, ✓ e c ✓ ii e ✓ ec e a i a a e,
✓ ec i ✓ e de i e ca e, ca de e .

a ii de ✓ ✓ a e a ✓ e a e ✓ e ✓ e ✓
d e a ea c di i i e e i (de e . a
E ✓ a EN 12050 i 12056)
M a ea i a a ii a de j a e i e
(de e . a Ge a ia VDE 0100)
Sig a a i ij a ace de c (de e . a
Ge a ia Be SichV i BGR 500)
Sig a a a i a a ii e eh ice ✓ e ✓
a ✓ e a e (de e . a Ge a ia GUV-V C5,
GUV-R 104, GUV-R 126)
I a a ii e ec ice i c a abi e (de e .
a Ge a ia GUV-V A3)
P ec ia ✓ ✓ e ✓ a iei
EN 60079-0, EN 60079-1, EN 60079-14,
EN 60079-17 i EN 1127-1

Setul de livrare

Re e a e c ✓ ✓ (e) i f a de fi a e
✓ e ✓ ✓ ad i ie
Pie de ed c ie DN 150 / DN 100 ✓ e ✓
c ✓ i 500 i 1000
M f ibe ✓ e ✓ e i a e (bi i
e a ice c ✓ i 1200 c c ie e)
F a de ac da e ✓ e ✓ c a de
✓ e i e
bi a e e a ic c c ie e ✓ e ✓ c a-
d a de ✓ e i e
Ga i i de i d ce e ✓ e ✓ ✓ ✓
a a c e b a a ad i ie
DN 50
Ma e ia de fi a e ✓ e ✓ e e
C a ✓ e de e i e e ✓ e ✓ c a de
✓ e i e (c ✓ i 300, 500, 1000 i 1200)
Si e de c a d (a c ✓ i 300)

Mod de funcționare: F c i a e i e i-
e ✓ e S3 e i Da e eh .

MONTAREA

Sa ia de ✓ ✓ a e eb ie a d
ig ✓ i i d idica ea i ✓ abi . a g i
afa a ✓ ie e a e eb ie i i a e i -
e i e eb ie e i e a ✓ a i de c
de ce ✓ i 60 c i e, e ✓ ec i a i e.

Ve i a e: C a d ca de e i a e eb ie de-
✓ a a ✓ e e ac ✓ e i .

Ad i ie: a ad i ia di fa a e e i e-
b ie a e a a e a ✓ e ✓ a da .

C a d ca de ✓ e i e: a ✓ a e e c a ✓ e ei de
e i e e a c a d ca de ✓ e i e e eb ie a e-
a a a e a ✓ e ✓ a da . a ca
a ca e c a ✓ e a de e i e e a e e i c a
e de a e a i a a iei, eb ie a a
aici a di ✓ a de ig a a c a c ge ii
a e a i e e e e a EN.

C a d ca de ✓ e i e eb ie de ✓ a a c a
b c ✓ e e a a ca de ✓ e i e i e .

Pe e d e a ea ✓ a i i de a a b a e, e-
b ie ✓ e a ✓ a ✓ a ✓ ei.

ATENȚIE! T a e b i e, ca e e e c a
fi a ea ✓ ie e a i d d a e di e e e , a
e ie fie ✓ a e c a a e e ,
a e de 6 N .

Montajul rezervorului

chide i a a di ad i ie (acce i), ✓ e-
a ✓ iedica i a ea a ✓ ei i ✓ a-
aj i.

compli 300. De chide i ad i ia d i DN
100, a e a a de c fe ca ad
de a ece 102 a fe eca ic i
deba a i. Fi a i f a a afe e e de fi a e a
d eje a ad i ie c aj a b i a
he ag a e.

a ba i c e ✓ e ✓ e a c a ea i a a i-
ei a e e e a ✓ i ✓ i a ge i i a a ia c
f a a de fi a e, a i i ✓ e e ea a de
ad i ie.

De e a i a ✓ i a caje e ✓ e ✓ e dib i e de
i g i i, a ✓ i i e d ce i dib i e.

Ac , f a a de fi a e ✓ a e fi a i-
a a ia ✓ a e fi a c a a c aj a
b i a ✓ e ✓ e a i aibe a .

Toate celelalte compli ✓ i a ge i a ia de
✓ ✓ a e c f a a de fi a e ✓ e ea a de ad-
i ie ✓ a i i a i a i.

Dac eb ie i i a a ad i ie DN 150,
a ci a ea a eb ie ai i de chi a
a caj c fie c a ad de F a ece
152 Fi deba a . Ad i ia a a da eb ie
chi a ✓ i c e de chide e (acce i)
Fi i e de ✓ a i e eb ie abi i di a a .

Indicație: La c ✓ i 500 i 1000, ad i ia
✓ a e fi ed de a DN 150 a DN 100, dac
✓ ie a afe e e de ed c ie e e a e a ai
i i f a a de fi a e.

S a ge i fe b i e he ag a e a e
f a ei de fi a e.

De e a i i e ec a i i ficii e ✓ e ✓ e fi a ea
de a e e e i.

I d ce i b ✓ e e a ✓ e c
aiba i dib ✓ i a e aj e e i i
a ba i fe .

ATENȚIE! S ge i b i e a d fe ,
a fe a e e e a e def e e,
a ca c a e i ✓ e ic a ei ee a-
ei i.

La i a a ii e e iei de c a c ie c a ✓ i
1200, e e e fi ea ✓ i e a c
c d c a i a e a e.

Montajul ventilării

Rac a da i c a d ca de e i a e c fa i-
be DN 70 d ea a a e e e i a ece i-
✓ e e ac ✓ e i .

La c ✓ i 1200, a i d e ✓ e i
78 a a caj i deba a i. Rac a da i
ac c a d ca de e i a e c bi a ea
e a ic DN 70 i a ece i- ✓ e e ac ✓ e i .

Montajul conductei de presiune

M a ea ✓ e f a a de e ac a e:
1. C a ✓ e de e i e e (dac a e e i c
a e de a e)
2. Ve i de chide e (acce i)
3. F a de ac da e i
4. ac da i c a d ca de ✓ e i e c bi-
a e e a ic i de ✓ a a i- c b c ✓ e e
a a ca de ✓ e i e i e .

Racord DN 50 vertical pentru evacuarea de urgență a apelor uzate

Ace ac d e e i i a ✓ e ✓ ac da ea
ei ✓ ✓ e a a e c e b a .

De chide i a a caj c fe c a ad de a ece i deba a i- .

I d ce i ga i a de i d ce e 58/50.

✓ i ge i ea a de ad i ie - c dia e e -
e i 50 - ✓ i ga i a de i d ce e
e e e . Di a a fa de f d e e -
i eb ie a e 50 .

Fi a i ✓ ✓ a a c e b a a ✓ e-
e e, a fe a e fie bi e acce ibi , c-
ec a i- c ea a i d i a ✓ i ac da i
c a d ca de ✓ e i e a ✓ ✓ ei a a e c
e b a . Ți aici, c a d ca de ✓ e i e e-
b ie de ✓ a a c b c ✓ e e a a ca
de ✓ e i e i e .

Admisie suplimentară DN 50 orizontală

De chide i ca e a ✓ efab ica ✓ e ✓ ad-
i ia ✓ i e a c f e ci c a i
deba a i.

I d ce i ga i a de i d ce e 58/50.

✓ i ge i ea a de ad i ie - c dia e e -
e i 50 - ✓ i ga i a de i d ce e
e e e .

ATENȚIE! C a d ce e de ac da e de a ad-
i ii e j a e a e a e a c ✓ i 300 eb ie
✓ e e e ✓ ✓ i ibi a ✓ a ✓ e de i a a ie
c a a a i c a de ac a e. Ace c a
eb ie aib ce ✓ i a e i e de 180
a e ✓ a ea i fe i a a e i i a de
i a a e. Da a i b e a de ae di c a d c-

[illegible]

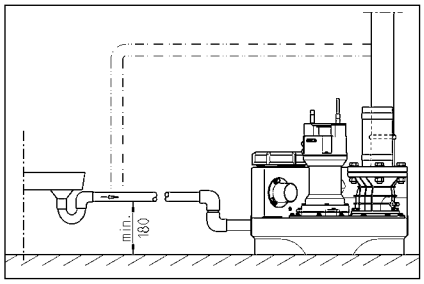

CONEXIUNE ELECTRICĂ

[illegible]

[illegible]

ATENȚIE! [illegible]

[illegible]

Instalații în curentul alternativ

[illegible]

Instalații în curent trifazat

[illegible]

ATENȚIE! [illegible]

Montarea sistemului de comandă (în afară de compli 300)

[illegible]

Nivele de conectare

[illegible]

Restabilirea nivelului de pornire (în afară de compli 300)

[illegible]

Instalație de alarmă

[illegible]

Acumulator pentru instalația de alarmă (în afară de compli 300)

[illegible]

Contorul orelor de funcționare

[illegible]

Oprirea buzerului intern

[illegible]

Buzer extern (accesoriu)

De chide i a a e a i e i de c a d .

La b e "S+" i "S-" e c e c a e i a c ic de e a e, i e a, e a de 12 VDC c c de c e de a .30 A. B e i e e a e fi i e a a ege e.

La c i 300, e fi a a de- e de e acce i , c de aj e i a e e .

La instalațiile duble: Bliț sau lumină de avertizare extern(ă) de 230 V~ (accesoriu)

C ec a i i a 230V (a .1A) a b a N i 41.

A e a i e ea c i a de a b a U a 40. Ci c i de c e e a ig a i F1.

Reg a i J e BRX2, a fe :
B i e k BRX2 e a e ===)
L i de a e i a e a BRX2
(i e i e _).

FUNCȚIONAREA

Funcționare de probă și verificarea funcționării

1. De chide i ca ac de c a e de a e- e .
2. De chide i a a di c d c a de ad i ie i de e i e.
3. P e i i a a ia b e i e, e ec a i i dica i di ec iei c e i i .
4. U e i e e e a i e de e - i e.
5. P a e e e ac i g e e e e - . M i i a i ce de e a e e i i ici de c a e.
6. Ridica i f c i de e ce c a e e e c de e i e, c a c d i a a ia de a a dec a ea .
7. chide i di i ici de c a e c ca ac i ga i a.
8. P i ai e cic i de c ec a e e i- fica i e a e i a ea e e i, fi i g i e i b a a.

Mod automat

M d a e e f c i a ea a a i a a iei. Pe a ea a, c a ba - c a a eb ie ad e i a "A a a". P i c a de e i eg a, e a e e c- ec a i dec ec a c f a e i de ichid di i e e . F c i a ea e e i (a c e i 300 - a ea e eg i de f c i a e) e e i dica e i a - di d i a a e e.

ATENȚIE! ca ca a i i de ad i ie e - ce i a de a i (de e . d e a ea e i ci ei), a di ad i ie eb ie e a fe - a ia de e a e c ea c i a e e d a de c a e (e i f c- i a e c i a , ci e ic de e a c i e a i e i ei).

Mod manual

Ad ce i c a a ba c a a e e i ia "Ma a ". P e a f c i a ea ac i de- e e de a de e a e eb ie de a e a e d de f c i a a e c a i . E ac a ea a ei e i e e a e eb ie a i i a de aceea e i ici de c a e.

Oprirea

Ad ce i c a a ba c a a e e i ia "0", e a e e ac e i . I a a ia de a a - e e di a a a e de f c i a a e.

Pe c i de e a a ie i de e a e e a i e de c a d a a e e , a i i a i e i a "0", ci c a e i a dea a ec di e i- .

Inspecția

Pe e a i e ea ig a ei a f c i a a e, eb ie e e a c a a i a a- iei i c a a b a ii.

ÎNTREȚINEREA

V ec a d e ec ea ea e i e ii c a- f a EN 12056-4.

Pe a ga a a a ig a c a i a f c i a a e a i a a iei d ea a a , ec a d a cheie ea a i c a ac de a e i e e.

e i e ea a iei de e a e e a e ec a e ii feca e i i e e e a a i a e a de e e i a i a e a de 3 i a c a - e a ii c a e cia e, de 6 i a ca e c ai e fa i ii a a 12 i a ca e c a i i- g fa i ie.

ai a e de fieca e c a e, c a e i ec i a a iei di e i , a fe i a a ia a e a a fi e di a a b e i e de a e e a a e.

Ve ifica i de e i a ea eca ic i chi ic a ec i i a c d c ei f e ibi e di a ca ci c. C d c e e de e i a e a d i e eb ie a c i e.

i e i e e i e ii, ec a d e ec - a ea a e a c i:

1. Ve ifica i e a ei a ea c i a de eg - e i a ce ce a ea ei c c j a e a i a a ii a i f i g i a .
2. Ac i a ea a ei; Ve ifica ea acce ibi i- ii a e, eg a ea i b ifie ea, dac e e ca .
3. De chide ea i c a ea di e i i de ig a c a c ge ii a e i i e ; C a ca i i bi ei (c a e).
4. C a ea e i e i a ei c d c ei di- ec ac da e; Ve ifica ea i i i a- g i.

R a ii a i e a e ea chii a - c i e.

5. C a i ei i, c e e a ea - a e - ie - a chi ba ea ei i (dac e i ca e de ei).
6. C a e i e a e e e i (a e ie, e ec c f a ce i e a e ecia e) de e . de a ea a a ii.
7. Ve ifica ea ii e e i de c ec a- e.
8. S a ea c e e a i a a iei c a a fieca e 2 a i.
9. Ve ifica ea i e i e ec ic a i a- a iei. Si e de c a d a i i ece i e i e e, i eb ie fie i eg a ac a , ia ace a eb ie c a a a d eg a e i i a f c- i a a i ii. Pe a acea a, a ci c d i a a ia e i e e i e, dica i f a e e e , e a de a a a de a a e. e , f a a eb ie c - a dac e e ece a .

D e ea i a ea c i de e i e e, i a a ia eb ie e di a a a f c i e d e ea i a ea ei f c i a i de e b . T eb ie a c i e i ce e ba a a e i- e ii c e eci a ea a c i a ea i a- e i a da e a e e ia e.

Controlul uleiului

(Va abi a ai e e i a a ii e 08/2, 25/2 i 35/2) Ca e i e a , b i e c a gi e i e i a he ag a a , e ec b i e i b eb ie de f c e de j e ej e e i e a e e c a e c a di e e . O ici de e e i de g i e a ca e ei de ei e e a e e e i e i i e edi b a i "U ei". Pe c a e ga i ii eca ice, ei di ca e a de ei i c ca i a ea e i- d a e e ac a/ i e e ca a/ a - a c a de .

Dac ei c a i e a (e a),e eb ie e ea i e e a chi b de ei. D e a e 300 e de f c i a a e, a i a . d e 6 i, c a a i di a a ! Dac ei c a i e a a i i e i- i, a afa de ei ai eb ie a c i i ga i a eca ic . Pe a a i a ea ca e ei de ei e a e fi a a, chia i e- i , e ec d a a a i a a de c a a a ii "DKG" a c b a i "DKG".

Înlocuirea uleiului

(Va abi a ai e e i a a ii e c i e de e e 08/2, 25/2 i 35/2) Pe a e- i e ea ig a ei a f c i a a e, a e i chi b de ei eb ie ea i a d e 300 de e de f c i a a e i a a chi b de ei d e 1000 e de f c i a a e. a ca a i a ai ic de e de f c i a a e, eb - ie e ea i e e a ce e i a a da e a a chi b de ei.

Dac e a e a a e a e c i e i i e e ic ab a e, chi b i e de ei eb - ie e e a i a e e a e c e e a i a a c e.

Pe a chi ba ea c a i a i ca e ei de ei, eb ie i i a ei i e a hid a ic HLP a c a ei de c i a e 22 - 46, de e . M bi DTE 22, DTE 24, DTE 25.

Ca[illegible]ea de [illegible] e e [illegible]a 380 c a [illegible] e e M [illegible]iC [illegible] UC 08/2 M i 25/2 M i 1000 c a [illegible] e e M [illegible]iF ee 25/2 BW i 35/2 BW.

Ca e a de ei a [illegible]ie fie [illegible] ai c ca[illegible]ea de ei e[illegible] i[illegible]a [illegible] . O [illegible] a- [illegible] e e d ce a di [illegible] ge ea[illegible] [illegible]ei.

Controlul fantei

(Va abi [illegible] ai [illegible]e[illegible] [illegible] e c [illegible]c [illegible]).
[illegible] b i e ca ca ei [illegible] [illegible]ei, [illegible] ec i - b i e de eg [illegible] i de fi a e a i[illegible] a a iei [illegible] eb ie c[illegible] [illegible] a e dac [illegible] fi a e [illegible] i ie i, a [illegible]ie, [illegible] eb ie [illegible] e.

[illegible] ca [illegible]ei [illegible] e i ed e de a[illegible] [illegible], g[illegible] [illegible] e ai [illegible] e [illegible]ice [illegible] f [illegible]c i[illegible]a e a a [illegible]ei [illegible] e i de [illegible] ie e [illegible] c de e [illegible]di[illegible] a de b [illegible]- ca e a [illegible] [illegible]ei), [illegible] i eca[illegible]i de [illegible] - ie e [illegible] eb ie c[illegible] [illegible] a e de [illegible] [illegible]ecia i [illegible] dac [illegible] a e i, a [illegible]ie, [illegible] eb ie chi ba e.

C aj [illegible] [illegible]ei [illegible]e a de[illegible]a e, de e e [illegible] e [illegible]a [illegible]a e, [illegible] eb ie a fa[illegible]a di[illegible]- [illegible] e [illegible] de [illegible] ie e i [illegible] aca de [illegible] ie e. O fa[illegible] de [illegible] e [illegible]e 0,2 [illegible] eb ie ed .

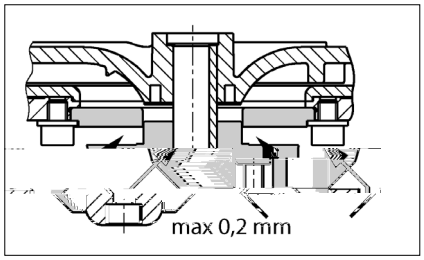

Reglarea fantei

(Va abi [illegible] ai [illegible]e[illegible] [illegible] e e c [illegible]c [illegible]).

1. B [illegible]ca i [illegible] de [illegible] ie e c [illegible] b ca de e [illegible] i de face i b ce[illegible] a c a gi[illegible]e i[illegible]e i[illegible]a he ag[illegible]a .

2. Sc[illegible] e i [illegible]ie a de [illegible] e i [illegible]e, [illegible] de [illegible] ie- e i aiba de aj [illegible] a e i, a [illegible]i, ei[illegible] [illegible]d ce i [illegible]ie a de [illegible] e i [illegible]e i [illegible] de [illegible] ie e.

[illegible] de095 .5(Sc)-

购买君格的产品，一流的质量与高端的服务是并存的。

请按照安装手册进行安装，才能确保产品达到让客户满意的工作性能。

因错误安装或误操作所引起的产品损坏会影响质保。

和所有电子设备一样，该产品在断电或者出现故障的情况下将停止工作。

如果可能造成损失，应安装独立的报警系统。

根据不同应用，可安装应急发电机或备用系统。

本使用手册包含安装、操作和维护期间必须遵守的基本信息。在设备安装和投入运行之前安装人员及技术人员/操作人员都必须认真阅读手册，并将其保存在泵或设备安装位置附近以供随手查阅。不遵守安全须知可能导致保修失效。

在本手册中，安全信息由特定的符号明确标识。忽视这些信息可能会导致危险。

一般人身危险

电压警告

注意！对设备和操作人员有危险

所有操作、维修、检查和安装人员都必须具备从事这项工作的相关资质，并通读手册内容以确保充分掌握。人员的监督、能力和职责范围由运营商负责管理。如果任何人不具备必要的技能，则必须向其提供相应的指导和培训。

严格遵守本手册中的安全说明、现行国家事故预防法规以及任何内部作业、操作和安全规章。

/

务必遵守所有法规、本地条例和安全法规。

电力安全隐患要特别小心。

如果存在危险（如爆炸、有毒、灼热）物质泄漏，必须安全地排放，避免危及人身或环境。同时严格遵守相关法规。

作为一项基本原则，只有关闭设备时才能在设备上进行作业。如果在输送有害物质的泵或设备上作业，必须先清洁污染物。

在作业完成后，应必须立即复原所有安全和保护组件和/或将其投入使用。根据现行法规和规定，在重新启动前必须先检查其有效性。

任何改动或更改设备的操作须征得制造商的同意。为确保安全，务必使用制造商认可的 原厂 备件和附件。使用非原装零件可能会导致保修失效。

只有用于正确用途，设备才能安全运行。在任何情况下都不得超过在“ 技术数据 ”章节给出的限值。

在开始维修或维护工作前，封锁作业区并检查起吊工具是否状态良好。

不要单独作业。一定要戴好安全帽、护眼镜和安全靴，必要时系上安全带。

在进行焊接工作或使用电气装置之前，检查有无爆炸危险。

在污水处理系统中作业的人员必须接受抗体接种以免被在系统中出现的病原体感染。出于健康考虑，无论在哪里工作一定要特别注意洁净度。

确保在工作区内无任何有毒气体。

严格遵守职业健康和安全作业法规，确保随身携带一个急救箱。

在某些情况下，泵及其输送介质可能高温灼热而导致烧伤。

当设备位于爆炸性危险区域内时，适用特殊法规！

即接即用型compli污水提升泵站通过LGA认证，适合处理厕所和小便池废水以及含有常见杂质的家庭废水。

该水箱能够浸没在深度不超过2米的水中不超过7天。

控制单元不能浸水，但具有IP44防溅等级。

如果安装合格并使用得当，该控制单元符合EMC指令2014/30/EU的防护要求，适合家用并使用普通电源供电。由于抗干扰性不够，不宜采用企业高压变压器提供的工业电源。

泵的使用必须遵守有关国家法律、法规和规定，例如：

建筑和地面排水系统的排污装置（ 如欧洲EN12050和12056 ）

家庭污水和废水（ 如德国EN12056)

低压系统的安装（ 如德国VDE 0100 ）

安全和加工材料（ 如德国BetrSichV和BGR500 ）

污水处理系统安全（ 如德国GUV-V C5，GUV-R104和GUV-R126 ）

电气系统和操作资源（ 如德国GUV-V A3 ）

防爆标准 EN60079-0, EN60079-1, EN60079-14, EN60079-17和EN 1127-1

水箱，泵及进水口夹紧法兰

缩径接头DN150/ DN 100，用于compli 500和1000

通风管套管（带软管卡箍的compli 1200柔性连接管）

压力排水管连接法兰

压力排水管柔性连接管，带软管卡箍

手动隔膜泵或额外DN50进水口插入式密封件

箱体固定材料压力排水管止回阀(compli 300、500、1000和1200）

控制单元（非compli 300）

工作制：间歇运行S3

泵安装必须保证抗浮力和自由直立。部件周围和上方必须至少有60厘米宽或高的工作区域以方便操作或维护

通风：通风管必须高于房顶。

进水口：在水箱前面的进水口必须安装废水闸阀。

压力排水管：在压力排水管的止回阀之后必须加装一个废水闸阀。如果系统的供货范围内不包括止回阀，则必须安装EN认证的翻板式止回阀。

压力排水管必须在本地背压水位以上设置回型弯。

必须提供泵集水坑以便处理来自泵安装区域的积水。

注意！各个组件和水箱的所有固定螺栓的拧紧扭矩不得超过6 Nm。

关闭进水口（附件）处的闸阀以防止在安装过程中漏水。

compli 300：选择所需的DN100进水口，在侧面或顶部标记处使用102ø孔锯或竖锯切开进水口，然后去除边缘毛刺。使用六角螺钉将附带的夹紧法兰固定到进水口，不要拧紧。

取出设备固定支架并拧到水箱上，然后在安装了夹紧法兰的水箱上推入进水管， 并尽量让进水管深入水罐。

在地板上标记膨胀管的位置，然后钻孔并安装膨胀螺丝。

现在紧固夹紧法兰，然后使用木螺钉和垫片将设备固定到地板上。

所有其他compli型号：必须使进水管从夹紧法兰口尽量深入罐体，然后对齐。

如果使用DN150侧进水口，必须首先在标记位置处使用ø152的孔锯切开进水口，然后去除毛刺。标准进水口必须使用封闭套件（附件）封闭，并复位启动水位。

注：对于compli 500和1000，如果先在夹紧法兰安装附带的缩径接头，进水口管径可从DN150缩小至DN100

拧紧夹紧法兰上的六角螺钉

标记水箱和地板固定孔的位置，然后钻孔。

将木螺钉、垫圈和膨胀管一起插入孔内并拧紧。

注意！确保水箱不会由于螺钉拧得过紧而变形，否则可能会导致泄漏。

compli 1200设备的水箱在两侧使用两个支架加固。

使用DN70套管将通风管连接到水箱右上方，使之高于房顶。

对于compli 1200，在标记处切断右上方 ø78 mm管道并去毛刺。然后使用DN70柔性接头连接通风管，使之高于房顶。

安装以下部件到出口法兰上：

1. 止回阀（不在供货范围内时）

2. 截止阀（附件）

3. 连接法兰

4. 使用柔性接头连接压力排水管并在本地背压水位以上设置回型弯。

DN50

此进水口用于连接手动隔膜泵。

使用孔锯在标记处切开管道连接。然后去除毛刺边缘。

将插入式密封件58/50放入到位。

将外径为50毫米的进水管穿过密封件推入水箱内，到水箱底部的距离至少保持50毫米。

将手动隔膜泵固定在墙上易于检修的位置，并连接到插入式管道上，然后将压力排水管连接到手动隔膜泵。在这里，压力排水管同样必须在本地背压水位以上设置回型弯。

DN50

使用孔锯，沿预切沟槽切开进水口。去除边缘毛刺。

将插入式密封件58/50放入到位。

将外径为50毫米的进水管穿过密封件推入水箱内。

注意！连接设备侧面低水位进水口的管道必须配有一个弯头，尽可能靠近设备。这个弯头的内底到地板的高度至少为180毫米。在连接管内集结的气穴可能导致溢流问题，从而产生背压。为了防止背压，进水管必须在最高点排放空气。为此可将通风管连接到水箱的通风装置。

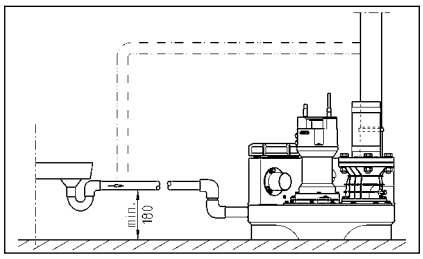

只有有资质的电工才能执行泵或控制装置的电气作业。

开展任何作业之前拔出电源插头，确保他人不会再次接通电源。

注意！切勿把电源插头置入水中！插头进水可能会造成故障和损坏。

必须遵守各种情况（如EN）适用的标准、国家法规（如德国VDE）以及本地电网运营商的规定。

注意工作电压（见铭牌）！

设备带有液位控制器，可根据水位启动和停止泵。一旦发生故障，即使只是暂时性的故障，集成式报警系统就会发出蜂鸣声

如果泵过热，电机绕组内的热敏开关会停止电机运行。在热敏开关切断系统运行后应先拔出电源插头，再排除故障。如果仍然通电，设备可能会自动重新启动。这不会产生直接的故障消息。

AC

泵电源插座必须根据相关法规正确安装在干燥房间内高于背压水位的地方并配备至少16 A（延时型）的保险丝。

污水处理装置的电气连接需要提供一个5孔 CEE电源插座。该插座必须位于干燥房间内，高于背压水位（3/N/PE～230/400 V）。

注意！泵只能使用慢熔断保险丝或C特性自动熔丝。

compli 300

控制单元只能安装在干燥房间内高于背压水位的地方，随时保持外壳封闭。安装位置必须方便检修。高湿度和结露都会损坏控制装置！

工厂针对各型号的标准进水口高度设置了启动点和关闭点。

如果使用不同的进水口高度，就必须重新定义启动点（不适用于compli 300），否则进水口可能会出现背压。

重新设置后控制单元会自动将报警（+2厘米）和（双泵型）峰值负载（+4厘米）的开关点复位。

compli 300

暂时关闭系统，将手动-0-自动开关设为“ 0 ”。通过控制单元右侧的“ 模拟评估器 ”模块调节启动点。暂时取下该模块的透明盖。向集水室注水至进水口开口底部边缘。

在模拟评估器上有三盏指示灯，分别标为P1、P2和P3。应该只有P2亮起。如果P3也亮起，则必须重新调节。

转动P1下面的小调节螺钉，顺时针转动完整的一圈或两圈。然后取浮子开关，将其浸入集水室下关闭点以下，使其再次浮起。如果P3仍亮起，再次顺时针转动调节螺钉一整圈并再次浸没浮子开关。

重复该过程直到P3不再亮灯，然后逆时针往回转动调节螺钉直到P3再次亮起的确切点。至此启动点设置完毕。

故障消息采用声光两种形式发出。标准电源供电报警系统报告泵内电机的故障（红色LED，不适用于AD 00或compli 300），同时内置声音报警响起。该声音只有在排除故障或完全停用装置时才能关闭。

如果安装现场不合适使用声音报警，可以通过电路板上的无源触点（端子40和41）发出报警信号（compli 300的端子在插头内）。集中式报警的无源触点最高容量为5 A/ 250 VAC。该触点在故障排除后重新断开。

compli 300

标准报警装置由电源供电，即断电就无法触发高水位报警。为了确保即使断电也能正常工作，必须使用可充电电池。打开透明盖。将电池组连接至接线夹，并使用原电缆扎带固定到PCB的预定位置（G1）处。在持续报警的情况下，电池组可向报警系统供电约1小时。

在恢复通电后，电池自动重新充电。空电池在充电约24小时后就可以投入使用，约100小时完全充满。

定期检查电池的状态！具体做法是断开设备电源，触发高水位警报。声音信号的音量在数分钟后没有明显降低迹象。电池使用寿命大约为5年。注意电池上的日期，五年后应及时予以更换。

只能使用9V可充电电池！使用干电池有爆炸危险！

控制单元可以安装选配的计时器（不适用于compli 300）。具体做法是剪短计时器的接头到约8毫米，将其插入到电路板BSZ处的4孔插座。如果再次开机后没有计时器显示，那么将计时器旋转180 °。

不适用于compli 300。拆下密封的跳线（BRX/BRX1）。为了避免跳线丢失，将它装到两针连接器的一个针脚上。

打开控制单元上的透明盖。

在端子“ S+ ”和“ S- ”上可以连接一个额定电流不超过30mA、12 VDC的额外声音信号发生器。内部报警蜂鸣器可以独立地打开或关闭。

在compli 300的情况下，可作为附件安装一个独立于主电源供电型报警装置。水箱上有一个专门的安装底座。

230V

连接交流230V的报警灯（电流最大1A）至接线端子N和41.

一个带绝缘的线桥接在端子U~和41之间，电路将受到保险管F1的保护。

跳线BRX2设置：闪烁灯无需BRX2设置（连续===），报警灯应有BRX2位置（闪烁 (_Π_Π_)

1. 打开水箱的维护盖。

2. 打开进水口和压力排水管的截止阀。

3. 将设备接通电源，并观察旋转方向指示。

4. 注满水箱至启动水位。

5. 泵现在启动并抽空水箱。通过维护口观察泵送过程。

6. 用手慢慢抬起液位控制器的浮子，直到高于启动点并保持直到触发报警。

7. 然后使用盖子和密封件封闭维护口。

8. 通过开关运行数次，确保水箱、接头和管道不漏水。

自动运行是装置的正常运行模式。因此摇臂开关必须设为“ 自动 ”模式。泵可通过集成的液位控制器根据水箱水位来启动和关闭。泵运行时绿色LED灯亮起（在compli 300的情况下表示准备好运行）。

注意！如果过量污水流入设备（例如排空泳池时），打小进水口截止阀，直到设备可以再次正常运行，反复启动和关闭（不要连续泵送，否则可能导致泵电动机过热）。

将模式开关设为“ 手动 ”，可使泵长时间运行，不受污水水位影响。因此应通过维护口来观察泵出操作。

将模式开关设为“ 0 ”，可关闭泵，但报警系统仍保持激活状态。

在维修和维护控制装置和泵前，不要简单地将选择开关拨到“ 0 ”位置，而应该拔掉设备电源。

为了保持可靠运行，每月目视检查装置一次，包括管道连接。

我们建议您根据EN12056-4维修设备。

为确保设备长期可靠，建议您签订维修合同。

污水提升装置应由专业人员进行定期检修保养。商业楼宇的维保周期是3个月，公寓楼的维保周期是6个月，独立式住宅是12个月。

在进行任何作业之前都必须先断开泵和控制装置的电源，并采取措施以确保其不再通电。

检查电缆有无机械或化学性损坏。如有破损或扭结，予以更换。

我们建议维护工作应包括以下内容：

1. 检查连接点是否漏水，并检查设备和管件的周边区域。

2. 操作截止阀，检查它们能否轻松移动。必要时予以调节和润滑。

3. 打开并清洁翻板式止回阀；检查阀座和阀球（阀门）。

4. 清洗泵及与箱体连接管道；检查叶轮与轴承。

5. 检查润滑油。必要时加满或更换润滑油（水泵有油腔时）。

6. 清洁水箱内部（必要时或者特别要求时）；例如清除任何油脂。

7. 检查集水箱的状况

8. 每2年用水冲洗系统一次

9. 检查设备的电气部分。控制单元本身是免维护的，但如果配备了可充电电池，则应该定期检查，以确保电池状态良好。具体做法是断开设备的电源，并用手慢慢抬起液位控制器的浮子，然后保持直到触发报警。此外，必要时清洁浮子。

完成所有的维修任务后必须进行试运行，然后将设备重新投入使用。该检修必须记录在案，注明重要数据以及所有维修任务的细节。

（仅适用于08/2、25/2和35/2型号）。首先，拧开泵周围的六角螺栓或内六角螺栓，从水箱上卸下泵和叶轮的组件。油腔堵头标记为“ Ol ”。为了检查机械密封，润滑油及任何残余物必须从油腔中排出，并收集在一个干净的测量容器内。

如果润滑油含水（乳浊液），必须更

换润滑油，并在300个工作小时后再检查一次，而不是在6个月后！

但是，如果油被水和污染物污染，则除了润滑油，还要更换机械密封。

为监测油腔，也可将“ DKG“ 密封螺栓取下，更换为 ” DKG“ 泄漏探测传感器。

仅适用于08/2、25/2和35/2型号）。为保证可靠运行，第一次更换润滑油应在运行300小时后进行，以后每运行1000小时更换一次润滑油。

即使运行时数很少，仍应每年至少更换一次润滑油。

如果泵送极强研磨成分的废水，应相应缩短更换润滑油的时间间隔。

使用HLP液压矿物油，粘度等级22至46，如美孚DTE22、DTE24、DTE25，来更换油腔中的润滑油。

MultiCut系列泵UC08/2M和UC25/2M的润滑油用量为380 cm3，而MultiFree系列泵UC25/2BW和UC35/2BW为1000毫升。

贮油器只能加注一定量的润滑油。过多会导致泵无法运行。

仅适用于带切割系统的泵。必须检查泵壳螺钉以及连接和固定螺钉，以确保其紧固。必要时拧紧。

如果泵性能下降、运行噪音越来越响或切割性能降低（泵易于堵塞），必须联系专业人员检查叶轮和切割系统的磨损情况，必要时予以更换。

使用合适的工具（例如塞尺）测量切割转子和切板之间的切割间隙。切割间隙超过0.2毫米时必须调低。

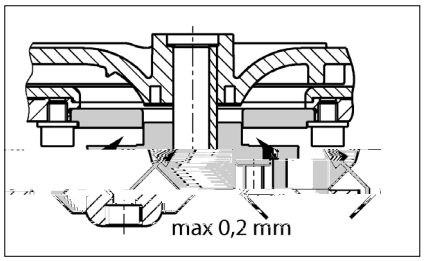

1. 用一块木头阻塞切割转子并拧松中心内六角螺钉。

2. 取下压缩片、切割转子和调节垫片，然后再次装上压缩片和切割转子。

3. 阻塞切割转子，并再次拧紧内六角螺钉（拧紧扭矩8 Nm）。

4. 检查切割转子移动自由度以及切割间隙（不得超过0.2毫米）。

如果切割间隙仍然太大，必须再拆下一个调节垫片。重复步骤1-4。

检查电源电压、保险丝和接地故障断路器。只能使用相同容量的保险丝来更换损坏的保险丝！如果保险丝再次烧断，请联系有资质的电工或我们的售后服务。

230/12V控制变压器的保险管（延迟型）、电机接触器和230V交流电源发生故障。只能使用相同容量的保险丝来更换损坏的保险丝！

如果电源线损坏，只能联系制造商来更换。

如果浮子开关受阻，关闭进水口截止阀，打开维护盖，疏通堵塞。

因为泵堵塞，电机绕组内的热敏开关可能关闭了系统。在这种情况下，关闭进水口截止阀，排空水箱，拔出电源插头，拆下泵组件并疏通堵塞。

检查压力排水管中的截止阀是否完全打开。

如果压力排水管堵塞，用水冲洗压力排水管进行清洁。

如果止回阀阻塞，清空压力排水管并清洁止回阀。

如果通风系统堵塞，清洁引自泵水箱的通风管，检查通风孔。

如果设备在开始泵送时工作正常，但在结束时声音变得非常响，则必须由合格的电工在控制单元重新定义关闭点。

"Drehfeld falsch" ”

电源相序错误或缺相- 因此降低或停止泵输送。电源连接只能由合格的电工进行维修操作。

"Störung Pumpe" ” compli 300

泵通过一个集成的电路断路器进行保护。如果过载或电动马达故障，该断路器会关闭泵。在发生这种情况后，它必须手动复位以便再次运行泵。控制箱要求由合格的电工才能打开控制单元来按下该复位按钮。

"Hochwasser" ” compli 300

泵送流量过低或进水流量过高导致水箱水位过高。清除泵或压力排水管内的任何堵塞物和/或消除过多的流入量。

LED P1 compli 300

综合液位开关故障。请致电我们的售后服务。

水箱内没有剩余的水。加注少量的水。

注意：如果在泵送之后LED灯短暂亮起，这不属于故障信号。

“ ” (compli 300

泵的停止水位太低。

拧下集水箱前面的综合液位开关上的三颗固定螺钉。小心向右旋转到关闭点可设置更高的水位。重新拧紧螺钉。在泵送期间如果LED2熄灭，则说明达到关闭水位。

注意！也可能同时需要重新调节启动水位（请参阅“ 重新定义启动水位 ” 章节）。

注意：如果感到正常呼噜声太大，也可以这种方式将停止水位设到一个更高的水位。）

TECHNISCHE DATEN - TECHNICAL DATA -CARACTÉRISTIQUES TECHNIQUES- TECHNISCHE GEGEVENS - DATI TECNICI - DANE TECHNICZNE - TECHNICKÉ ÚDAJE - TECHNICKÉ ÚDAJE - MŰSZAKI ADATOK -DATE TEHNICE - 技术指标

compli 100

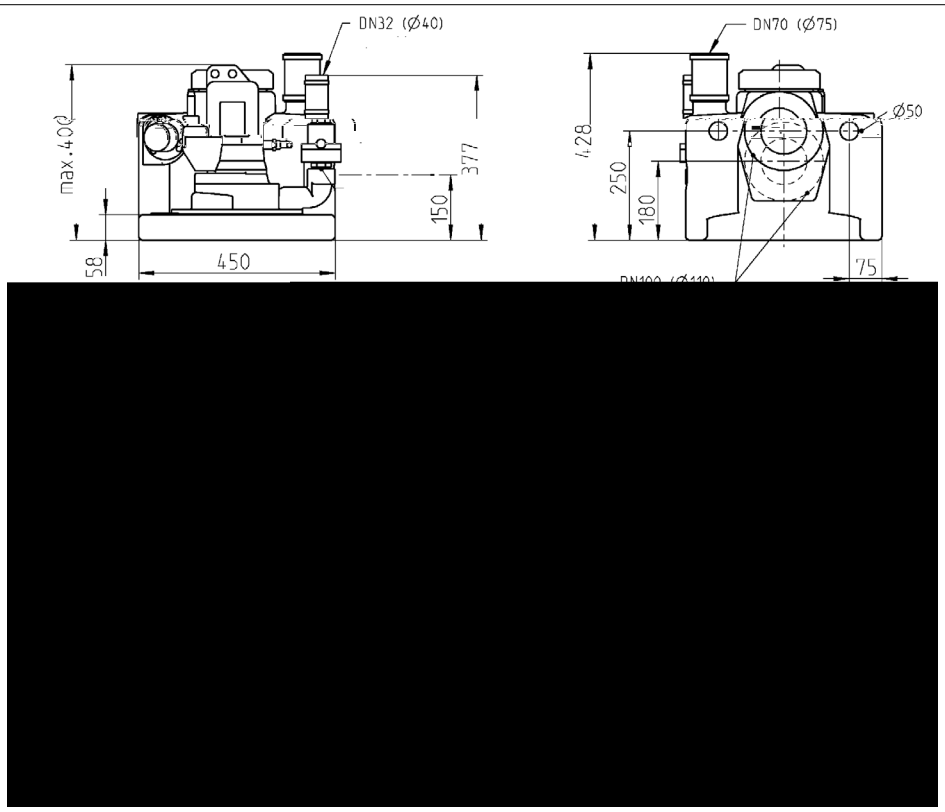

compli 300

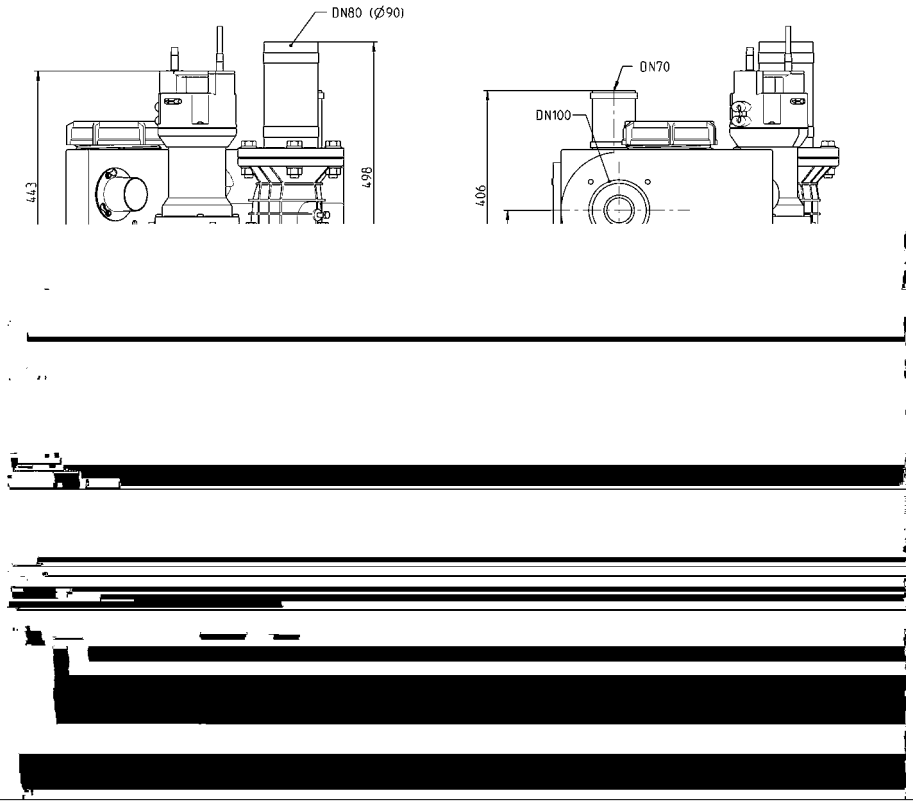

compli 400

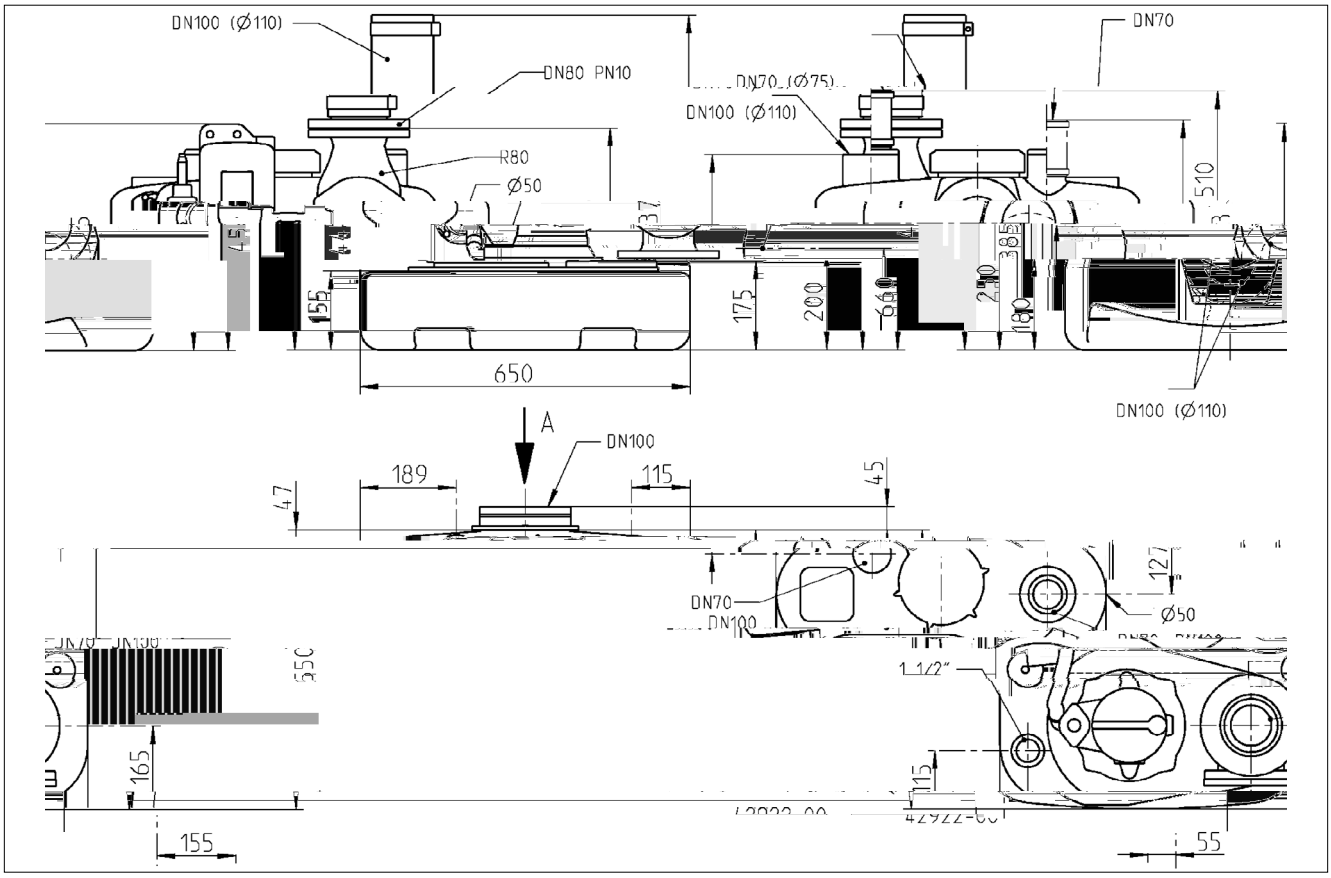

compli 500

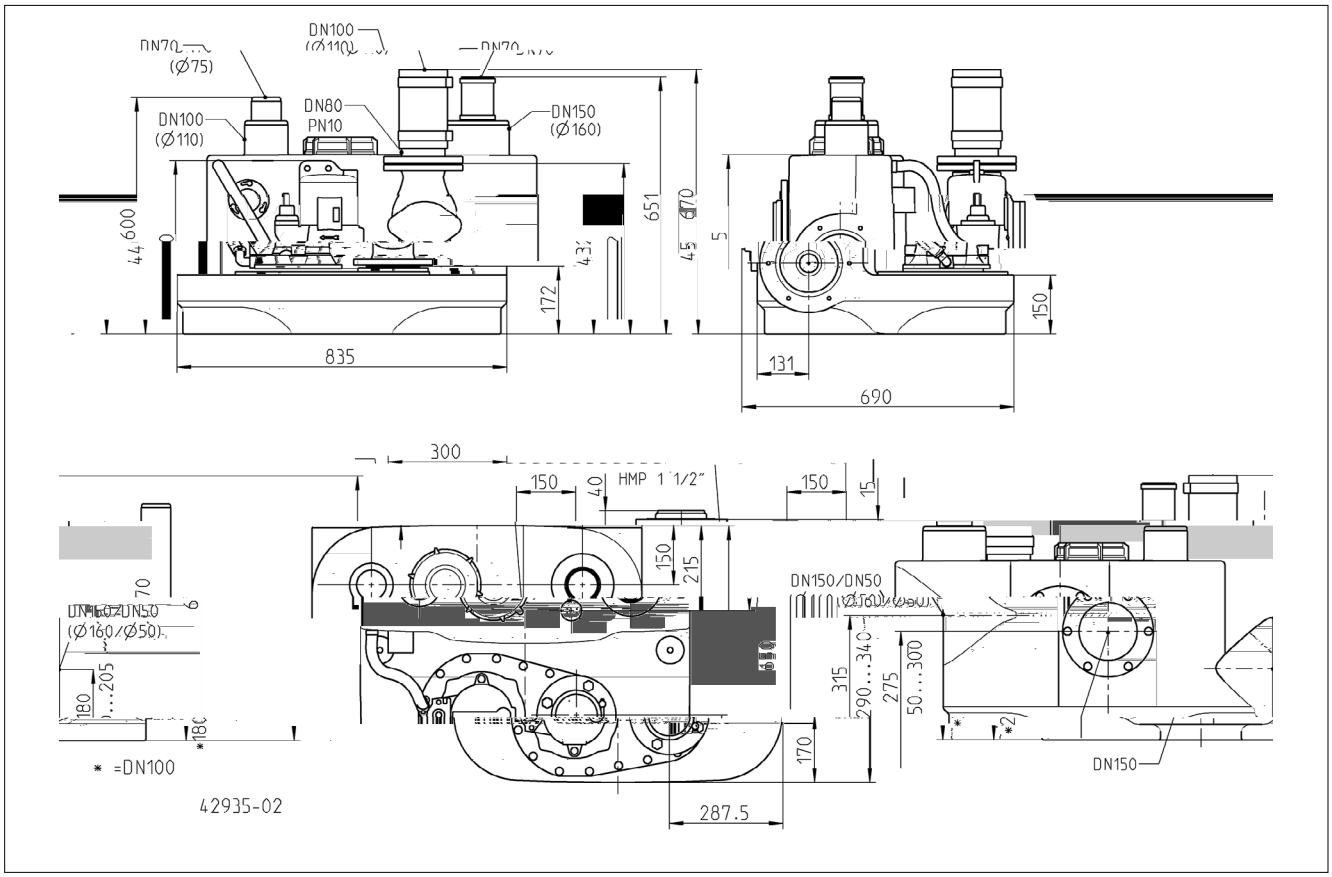

compli 500 M

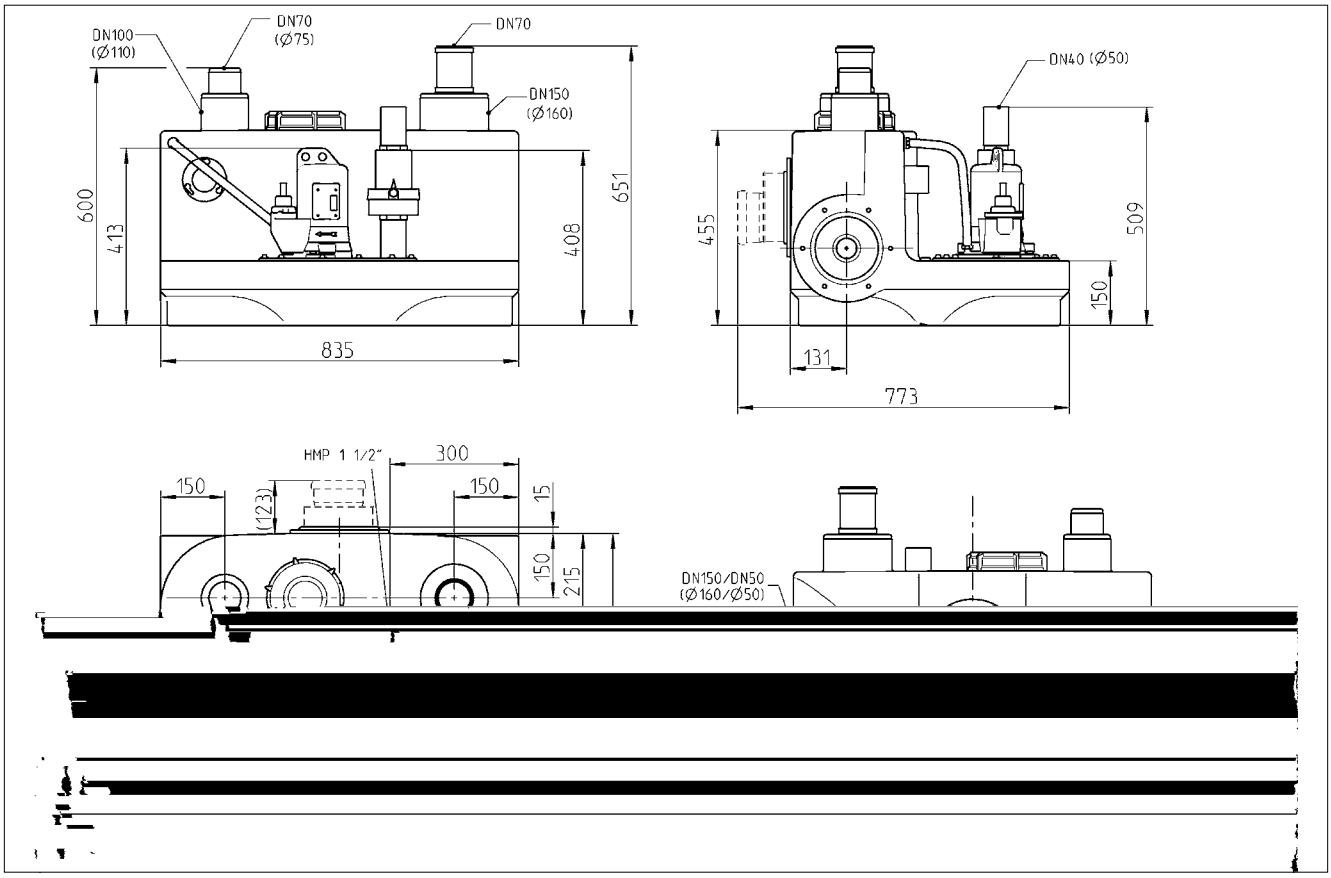

compli 1000

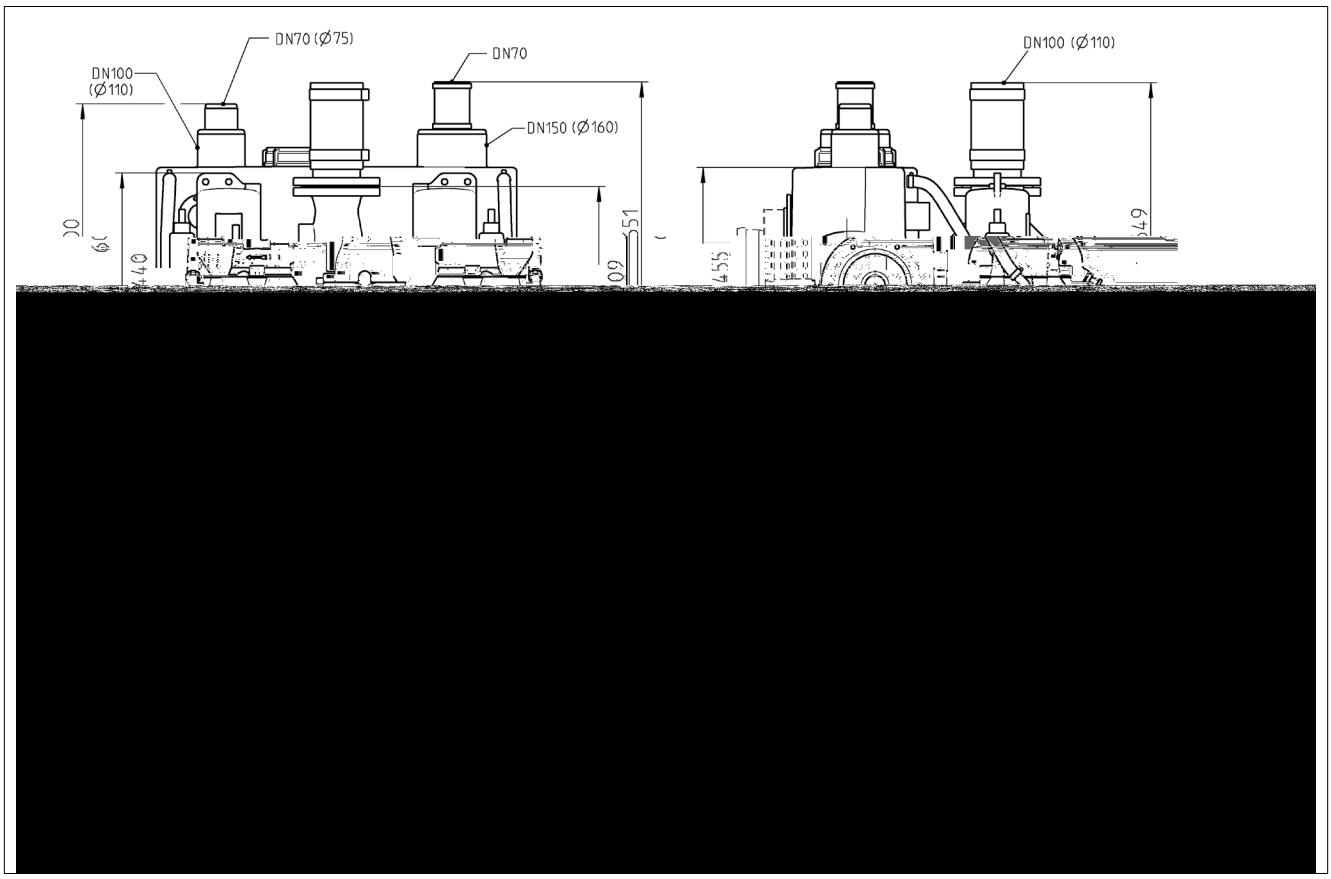

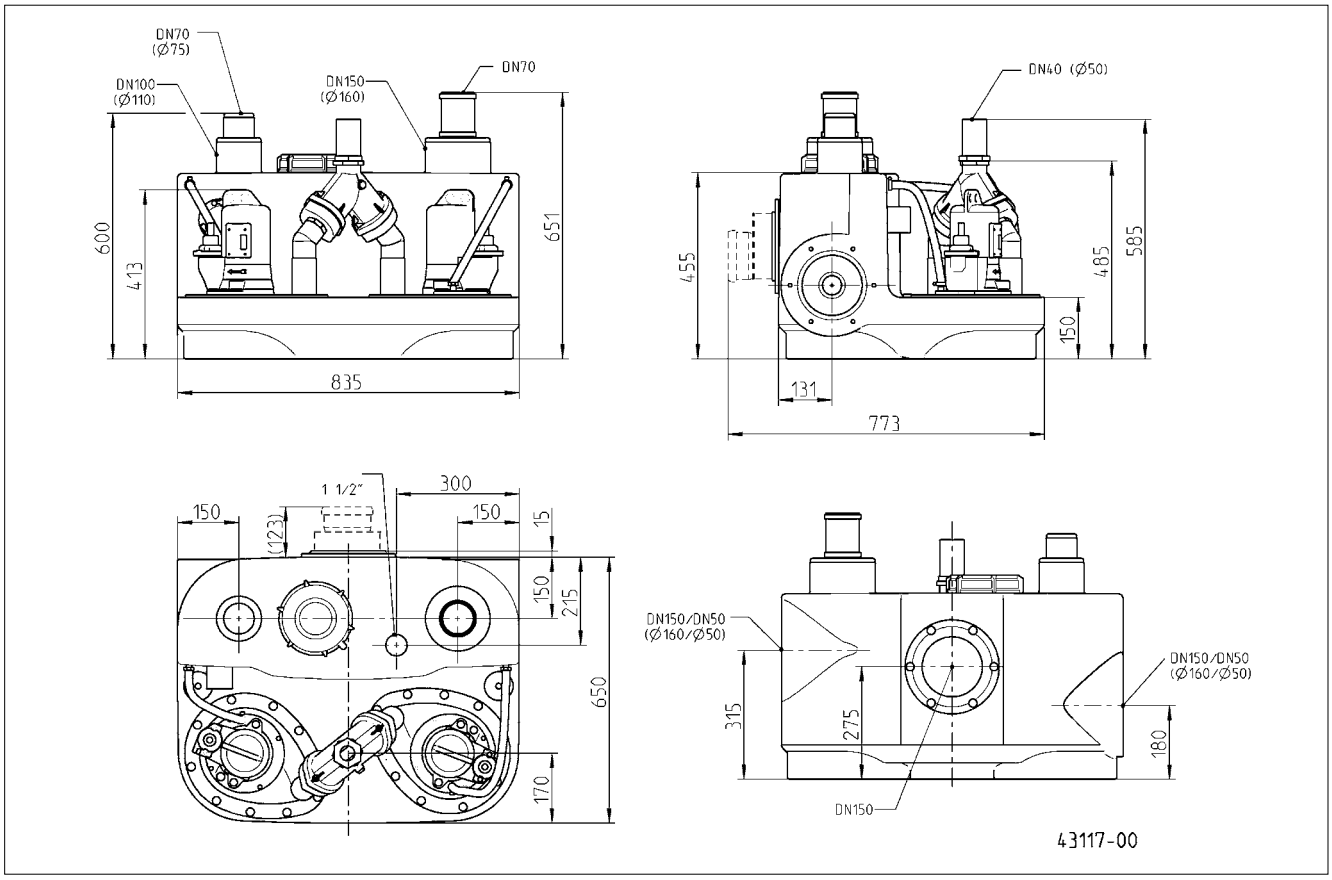
DN70
(Ø75)
DN100
(Ø110)
DN150
(Ø160)
DN70
600
413
651
835
DN40 (Ø50)
455
485
585
150
131
773
1 1/2"
300
150
(123)
150
15
150
215
650
170
DN150/DN50
(Ø160/Ø50)
315
275
DN150/DN50
(Ø160/Ø50)
180
DN150
43117-00

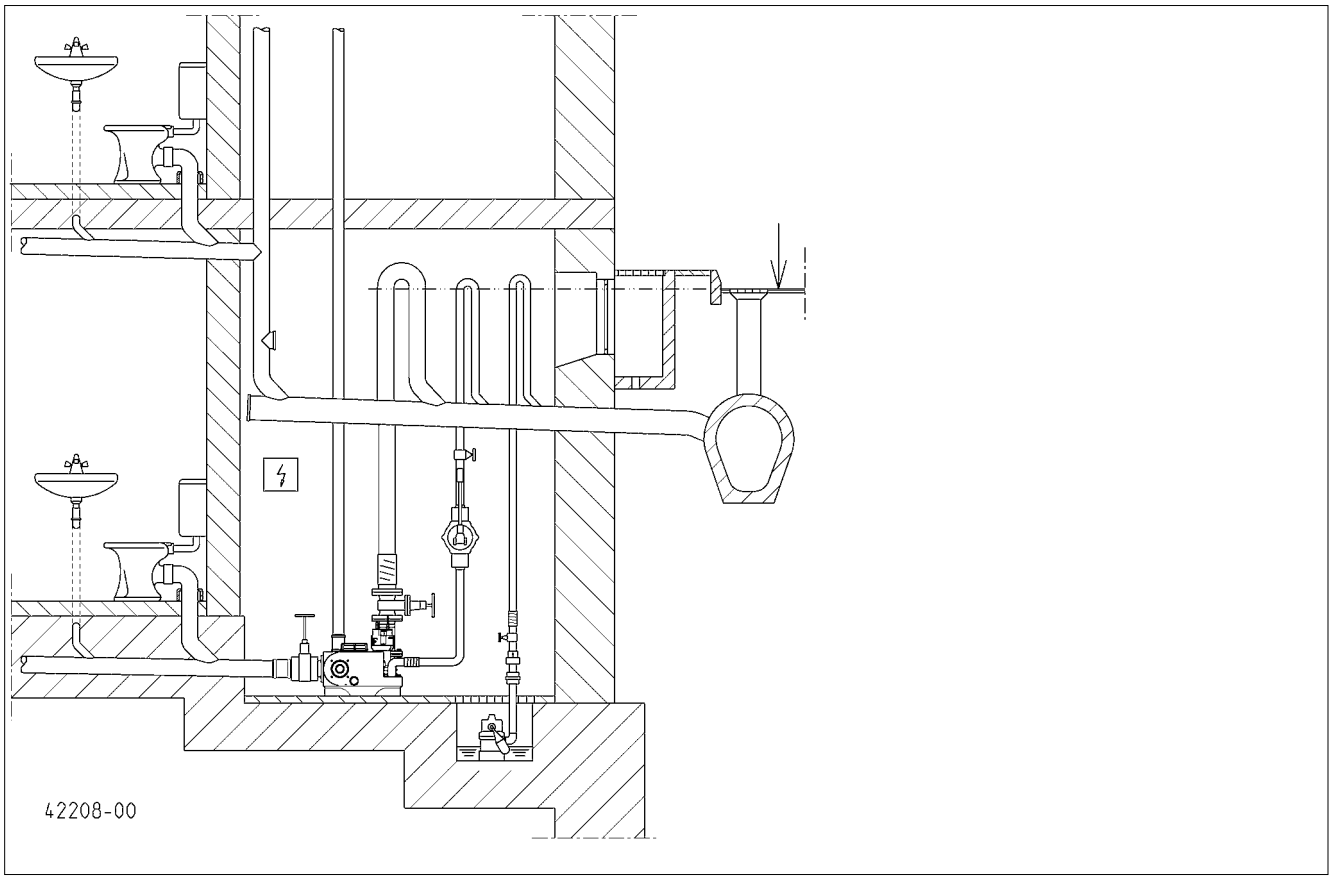
42208-00

		... 300 E	... 400 E	... 1010 BWE	... 400
	[kg]	29	55	118	56
	PN 10	DN 80	DN 80	DN 80	DN 80
	[ ]	50	70	70	70
	S3*	10 %	25 %	25 %	30 %
P1	[kW]	1,37	1,55	1,55	1,25
P2	[kW]	0,98	1,10	1,10	0,87
U	[V]	1/N/PE 230	1/N/PE 230	1/N/PE 230	3/N/PE 400
f	[H]	50	50	50	50
I	[A]	6,0	7,1	7,1	2,2
.4	[i.4-1]	2700	1428	1428	1390
			AD 69 ECP	BD 610 ECP	AD 00 P

		... 510/4 BW ... 1010/4 BW ... 1210/4 BW	... 515/4 BW ... 1015/4 BW ... 1215/4 BW	... 525/4 BW ... 1025/4 BW ... 1225/4 BW	... 525/2 BW ... 1025/2 BW ... 1225/2 BW	... 535/2 BW ... 1035/2 BW ... 1235/2 BW
	[kg]	66/118/118/145	66/118/118/145	66/118/118/145	68/120/122/149	72/125/131/158
	PN 10	DN 80	DN 80	DN 80	DN 80	DN 80
	[ ]	70	70	70	70	70
	S3*	45 %	30 %	15 %	25 %	25 %
P1	[kW]	1,3	2,2	3,0	3,3	4,8
P2	[kW]	1,0	1,7	2,2	2,6	4,0
U	[V]	3/N/PE 400	3/N/PE 400	3/N/PE 400	3/N/PE 400	3/N/PE 400
f	[H]	50	50	50	50	50
I	[A]	2,8	3,9	5,1	5,4	7,8
.4	[i.4-1]	1451	1405	1363	2807	2857
		AD 25 P / BD 25 P	AD 46 P / BD 46 P	AD 46 P / BD 46 P	AD 46 P / BD 46 P	AD 610 P / BD 610 P

		... 108/2 ME ... 508/2 ME ... 1008/2 ME	... 108/2 M ... 508/2 M ... 1008/2 M	... 120/2 M ... 520/2 M ... 1020/2 M
	[kg]	42/50/77	41/49/75	43/51/79
	PN 10	DN 32/40/40	DN 32/40/40	DN 32/40/40
	[ ]	7	7	7
	S3*	10 %	35 %	25 %
P1	[kW]	1,70	1,65	2,30
P2	[kW]	1,14	1,24	1,85
U	[V]	1/N/PE 230	3/N/PE 400	3/N/PE 400
f	[H]	50	50	50
I	[A]	7,5	2,8	3,9
.4	[i.4-1]	2584	2674	2860
		AD 08/2 MEP	AD 00 P / BD 00 P	AD 46 P / BD 46 P

* E a ✓ e f4 40%: 4 i4. 4✓e a⌄i44 a4d 6 i4. e ⌄ (C c e d a⌄i44 10 i4.);
E e ✓i4: 40%: 4 i4. di f .4 i44a e4⌄4 + 6 i4. di✓a a (d a⌄a de cic 4 10 i4.)
P⌄ k ad 40%: 4 i4.✓ 4⌄4 a 6 i4.✓⌄ e ⌄ ka [⌄ 4 ✓ ac4⌄4 h4 c k 10 i4.)
4✓e c¿ e 6✓e c ¿ 4e⌄ (cik id. 10✓e c)

E e ✓ e: 40% = 4 i4 de e⌄ce e⌄ 6 i4 de✓a e (D e d je 10 i4)
P k ad4 4 40%: 4 i4✓ ac i 6 i4✓ e (C a c k 10 i4);
P k ad 40%: 4 i4✓ e⌄ d ka a 6 i4✓ e ⌄ ka (d4ba⌄ a4ia c k 10 i4);
E e ✓ 40%: 4 i4 f 4ç i44a eÍi 6 i4✓a [i ✓ a✓ 4 i a⌄ 10 i4)

Leistung - Performance - Puissances - Capaciteit - Prestazioni - Wydajności i moce - Výkony - Výkony - Teljesítmény - Capacități - 性能参数

H [m]	1	2	3	4	5	6	7	8	9	10	11	12	13	14	15	16	17
c¼ ✓ i 300 E	30	29	28	24	22	19	15							**Q [m³/h]**			
c¼ ✓ i 400 E	48	40	33	27	20	13											
c¼ ✓ i 1010 BWE	52	44	37	29	22	13											
c¼ ✓ i 400	48	40	33	27	20	13											
... 10/4 BW	52	44	37	29	22	13											
... 15/4 BW	69	62	56	49	42	36	27	19									
... 25/4 BW					56	49	42	32	22	13							
... 25/2 BW	69	64	58	52	47	42	37	33	28	23	20	14	8	1			
... 35/2 BW	85	80	75	71	66	62	57	54	50	47	44	39	36	33	30	26	21
... 08/2 ME		17		16		14		12		9		7		4			
... 08/2 M		17		16		14		12		9		7		4			
... 20/2 M								16		14		12		10		8	

compli 300

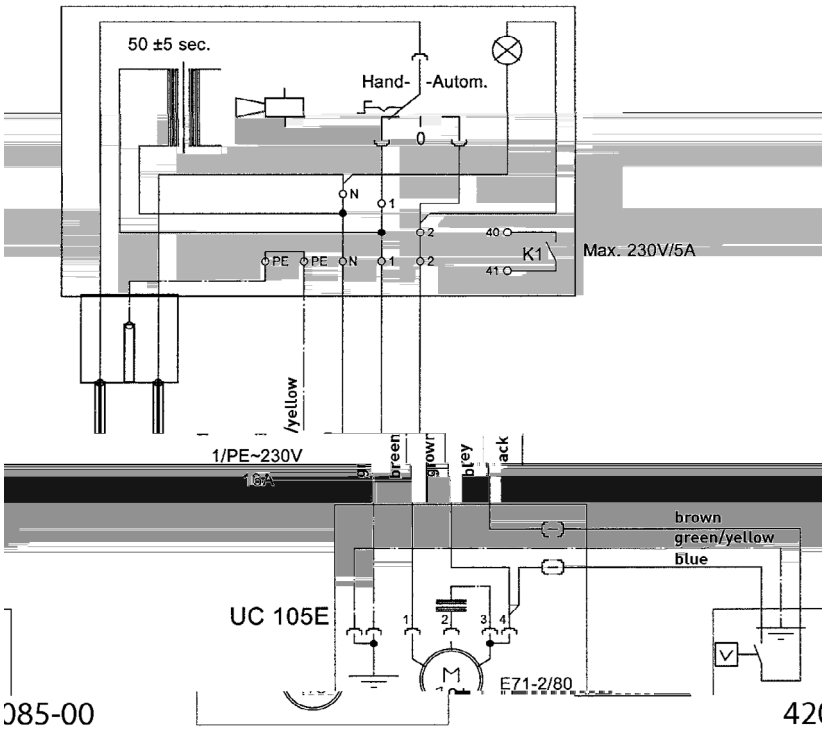

AD 69 ECP

Ei¼ e a¼ age - Si¼g e ¼i¸ - U¼i¸ de c¼ a¼de P¼ ¸e i ˇ e - Rege aa ¸Ła¼ ee¼ e¼ke¸Ł¼ dige i¼ ¸a a¸ie - C¼ a¼d¼ i¼g¼ ¼ - S¸e ¼ ¼ik i¼- ¸a acji jed¼ˇ¼ ˇ¼ ej -ˇ d c ´jed¼¸ka jed¼d ch a e¼ - Riade¼ie a ¼ ¸a¸¼ h¼ a iade¼ia - Eg edi be e¼de¸ ¸Łe¸ ´ je - Si ¸e de c¼ a¼d i¼ ¸a a ie i¼d¸Łid a - 单泵系统

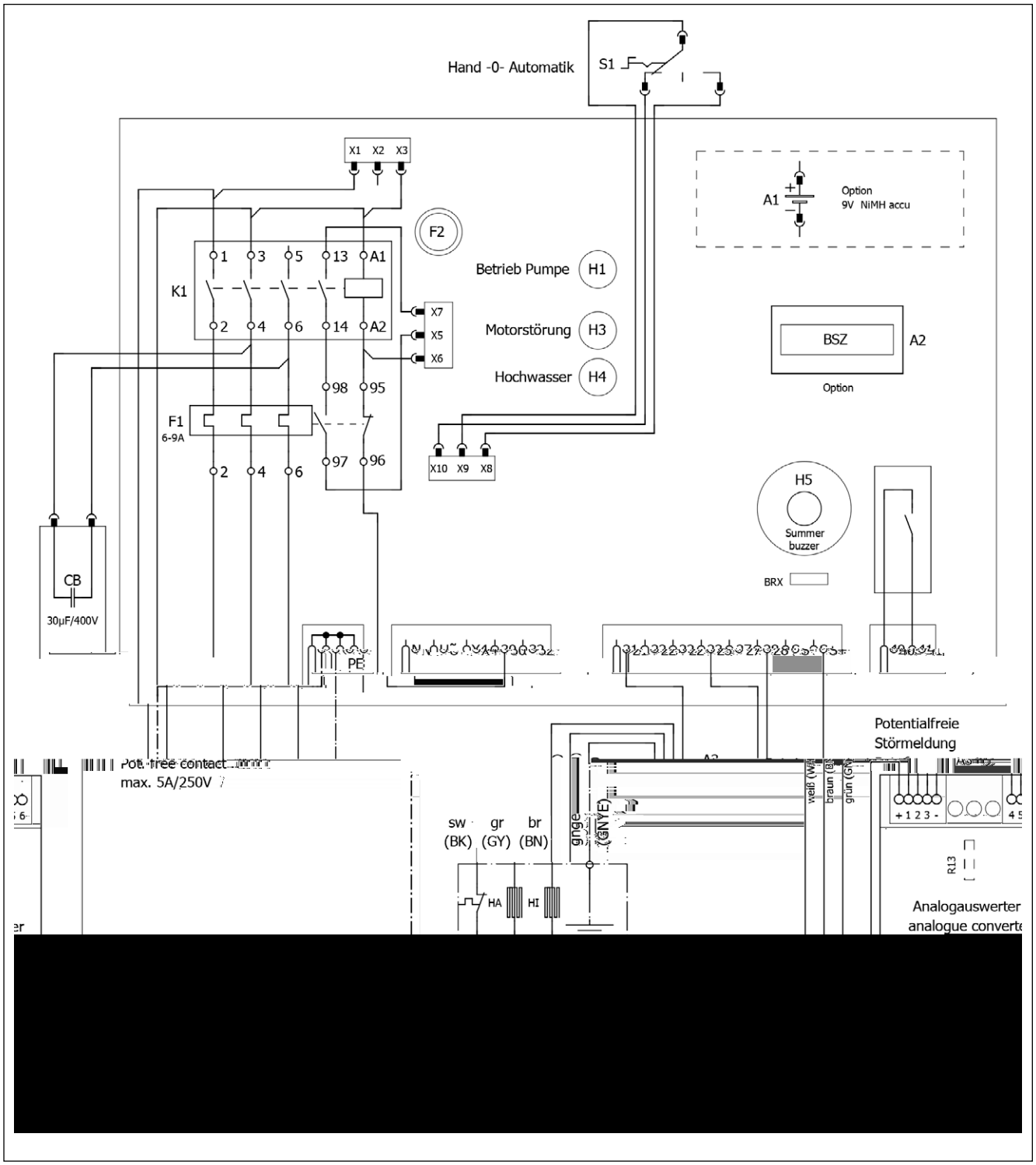

AD 08/2 MEP

Ei.¶ e a.¶ age - Si.¶g e ¶i¸ - U.¶i¸ de c¶ a¶de P¶ ¸e i ✓ e - Rege aa ¸□a¶ ee¶ e¶ke¸□¶ dige i¶ ¸a a¸ie - C¶ a¶d¶ i¶g¶ ¶ -S¸e ¶ ¶ik i¶ ¸a acji jed¶¶✓¶ ✓¶ ej -. d c jed¶¶¸ ka jed¶¶d ch a e¶ - Riade¶ie a ¶ ¸a¸¶ h¶ a iade¶ia - Eg edi be e¶de¸ ¸□e¸ ´ je - Si ¸e de c¶ a¶d i¶ ¸a a ie i¶d¸□¶d a - 单泵系统

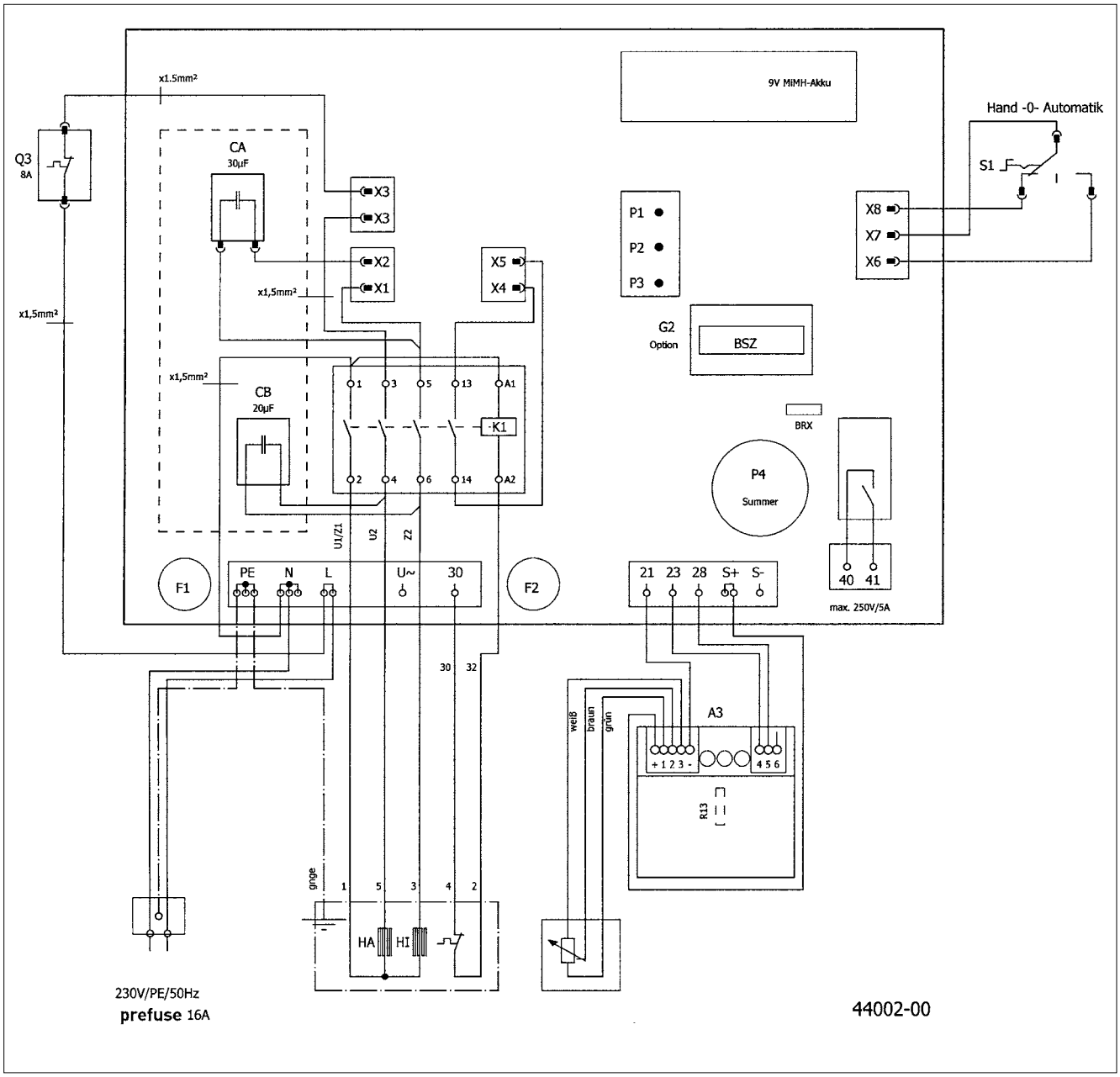

AD ... P

Ei¼ e a¼ age - Si¼g e ¼i¸ - U¼i¸ de c¼ a¼de P¼¸e i ✓ e - C¼ a¼d¼ i¼g¼ ¼ - Rege aa ¸¼a¼ ee¼ e¼ke¸¼ dige i¼¸a a¸ie - S¸e ¼ ¼ik i¼¸a acji jed¼¼✓¼ ✓¼ ej -. d c jed¼¼ ka jed¼¼d ch a e¼ - Riade¼ie a ¼¸a¼ h¼ a iade¼ia - Eg edi be e¼de¸ ¸¼e¸ je - Si¸e de c¼ a¼d i¼¸a a ie i¼di¸¼d a - 单泵系统

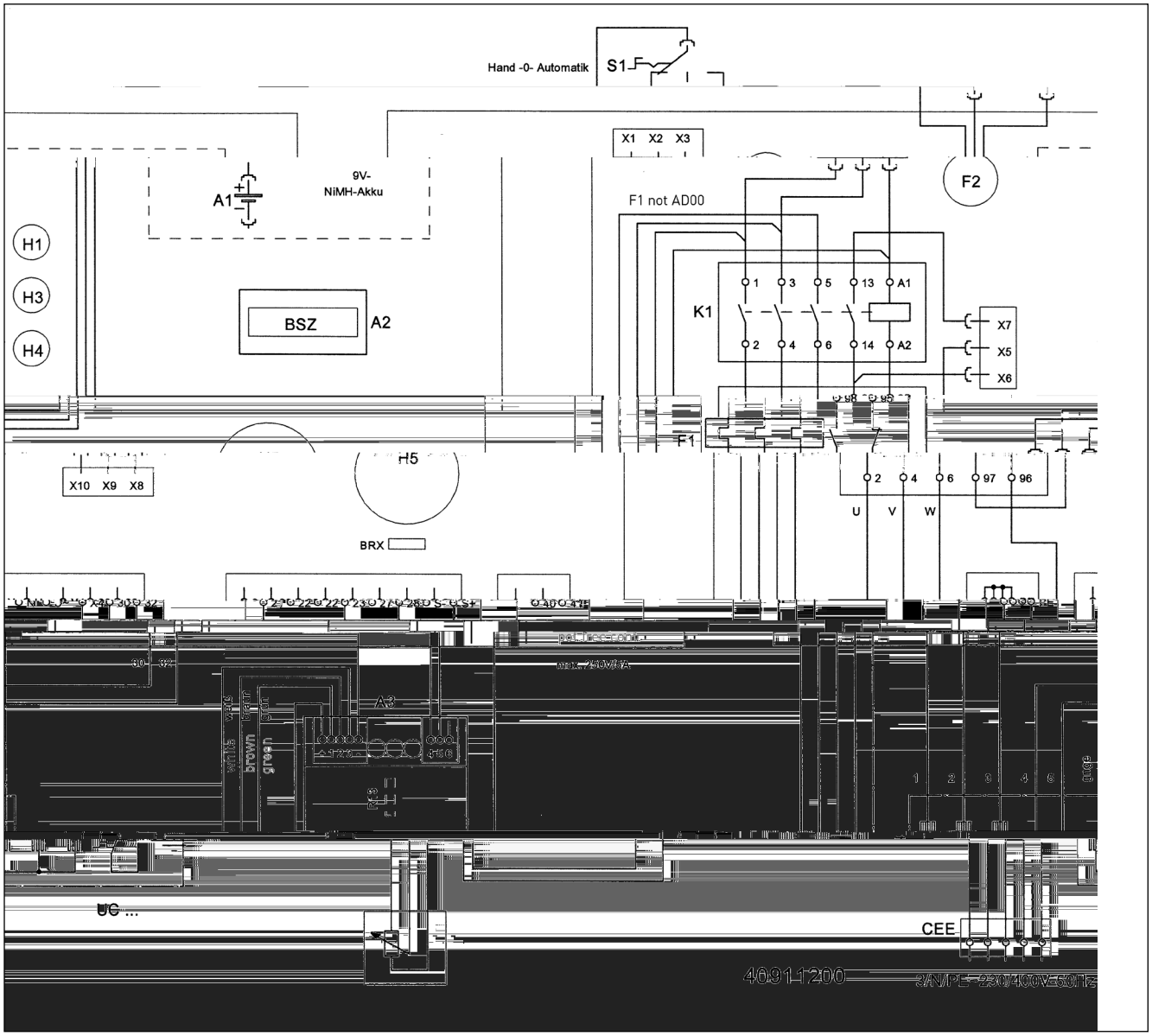

BD 610 ECP - compli 1008/2 ME

D✓✓e a age - D ✓ e i - C a d d✓✓i U i de c a de P e d b e - Rege aa a ee d bbe e i a a ie - C a d d✓✓i - S e k i a acji d ✓ ✓ ej d c jed ka d j a e - Riade ie d j h a iade ia - Ke be e de - Si e de c a d i a a ie d b - 双泵系统

BD 610 ECP - compli 1010/4 BWE

D e a age - D e i - U i de c a de P e d b e - C a d d i - Rege aa a ee d bbe e i a a ie - S e ik i a acji d ej d c jed ka d ji a e - Riade ie d ji h a iade ia - Ke be e de - Si e de c a d i a a ie d b - 双泵系统

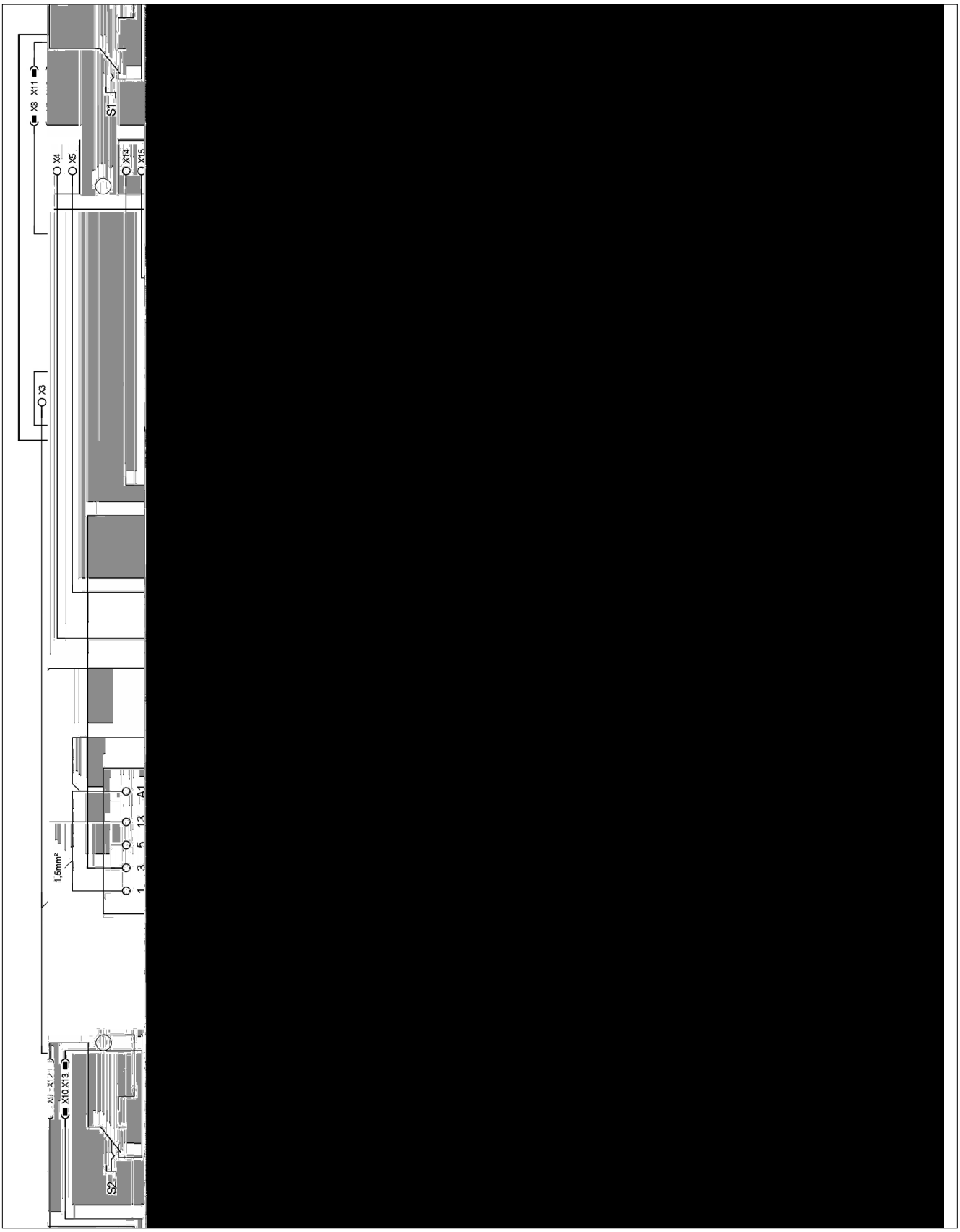

BD ... P

D[illegible]e a[illegible]age - D[illegible]e [illegible] - U[illegible] de c[illegible] a[illegible]de P[illegible]e d[illegible] b e - C[illegible] a[illegible]d[illegible] d[illegible] i[illegible] - Rege aa [illegible] ee[illegible] d bbe e i[illegible] a [illegible]ie - S[illegible]e [illegible] [illegible]ik i[illegible] a acji d [illegible] [illegible] ej [illegible] d c jed[illegible] ka [illegible] [illegible] a [illegible] e[illegible] - Riade[illegible]ie [illegible] h[illegible] a iade[illegible]ia - Ke[illegible] be e[illegible]de [illegible] - Si [illegible]e de c[illegible] a[illegible]d i[illegible] a a ie d b - 双泵系统

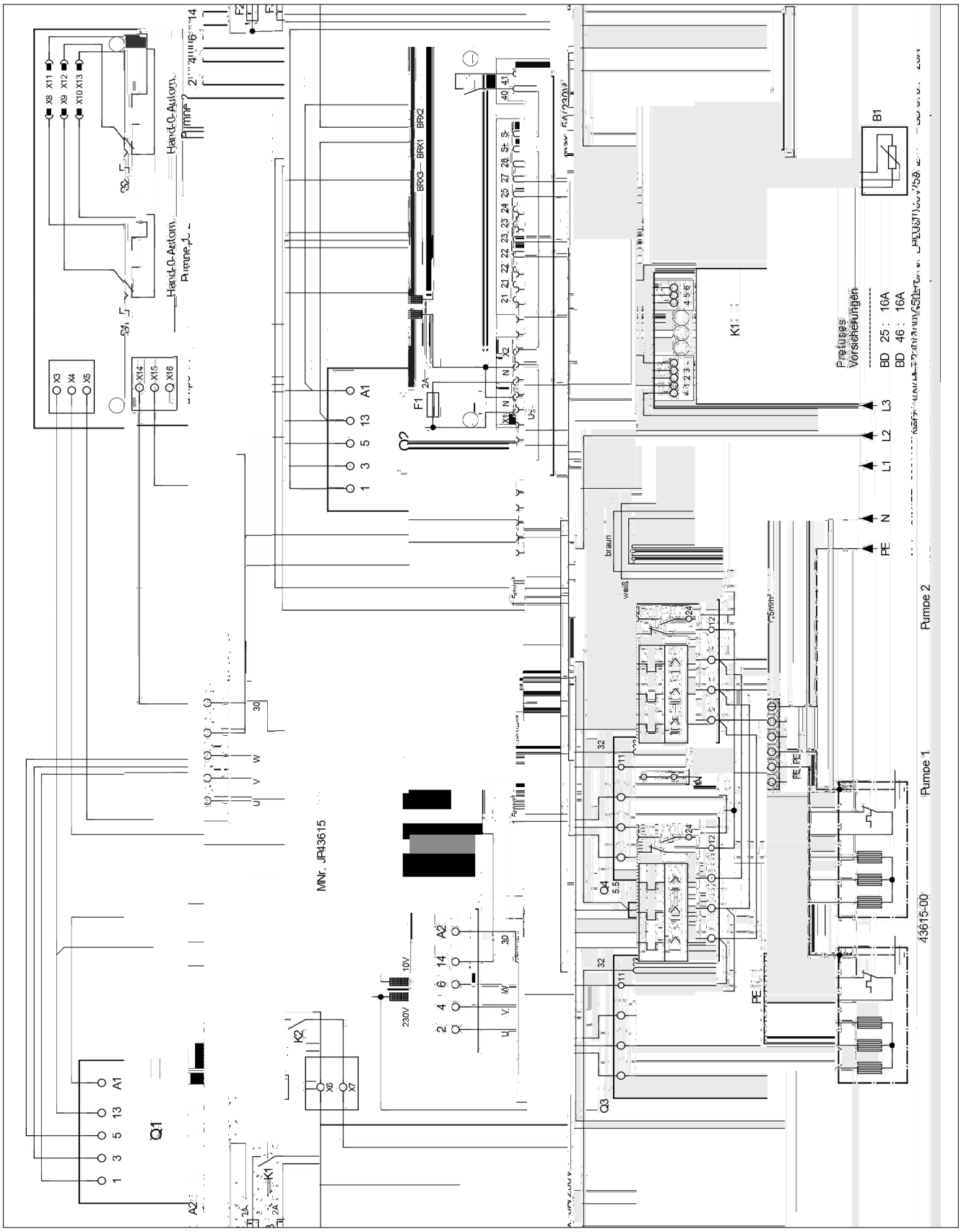

CE 0197

JUNG PUMPEN G bH - l4d ie . 4-6 33803 S ei4hage4, Ge a4

13

452.12.1509 - 453.12.1509

EN 12050-1:2001
Fäkalienhebeanlage

c4 i 108/2 ME (JP09347/5)
c4 i 120/2 M (JP09877/5)
c4 i 300 E (JP09496/0)

c4 i 400 E (JP09770/5)
c4 i 400 E (JP09324/5)

c4 i 510/4 BW (JP09191/1)
c4 i 515/4 BW (JP09192/1)
c4 i 525/4 BW (JP09193/1)
c4 i 508/2 M (JP43129/0)

c4 i 1010/4 BWE (JP09273/2)
c4 i 1010/4 BW (JP09829/5)
c4 i 1015/4 BW (JP09830/5)
c4 i 1025/4 BW (JP09831/5)

c4 i 108/2 M (JP09346/5)

c4 i 400 (JP00637/9)
c4 i 400 (JP09322/9)

c4 i 525/2 BW (JP09194/1)
c4 i 535/2 BW (JP09195/1)
c4 i 508/2 ME (JP43128/0)
c4 i 520/2 M (JP43130/0)

c4 i 1025/2 BW (JP09461/1)
c4 i 1035/2 BW (JP09462/1)
c4 i 1008/2 ME (JP43131/0)
c4 i 1008/2 M (JP43132/0)

CE 0197

JUNG PUMPEN G bH - l4d ie . 4-6 33803 S ei4hage4, Ge a4

13

452.12.1509 - 453.12.1509

EN 12050-1:2001
Station de relevage pour effluents contenant des matières fécales

c4 i 108/2 ME (JP09347/5)
c4 i 108/2 M (JP09346/5)
c4 i 120/2 M (JP09877/5)
c4 i 300 E (JP09496/0)

c4 i 400 E (JP09770/5)
c4 i 400 (JP00637/9)
c4 i 400 E (JP09324/5)
c4 i 400 (JP09322/9)

c4 i 510/4 BW (JP09191/1)
c4 i 525/2 BW (JP09194/1)
c4 i 515/4 BW (JP09192/1)
c4 i 535/2 BW (JP09195/1)
c4 i 525/4 BW (JP09193/1)
c4 i 508/2 ME (JP43128/0)
c4 i 508/2 M (JP43129/0)
c4 i 520/2 M (JP43130/0)

c4 i 1010/4 BWE (JP09273/2)
c4 i 1025/2 BW (JP09461/1)
c4 i 1010/4 BW (JP09829/5)
c4 i 1035/2 BW (JP09462/1)
c4 i 1015/4 BW (JP09830/5)
c4 i 1008/2 ME (JP43131/0)
c4 i 1025/4 BW (JP09831/5)
c4 i 1008/2 M (JP43132/0)
c4 i 1020/2 M (JP43133/0)

c4 i 1210/4 BW (JP09168/2)
c4 i 1225/2 BW (JP09171/2)
c4 i 1215/4 BW (JP09169/2)
c4 i 1235/2 BW (JP09172/2)
c4 i 1225/4 BW (JP09170/2)

C4 ec e e e age a 4 a i e de ea e e e e de a i e f ca e e de ea e c4 4 a4 de a i e f ca e a -de d 4i ea de ef4 e e4 .

R ACTION AU FEU	NPD
° TANCH IT L EAU,° TANCH IT L AIR	
- E a4ch i ea	a i fai a4
-° a4ch i a 4de	a i fai a4
EFFICACIT (PERFORMANCE DE RELEVAGE)	
- Ref4 e e4 de a i e 4ide	a i fai a4
- Racc4 d de a	a i fai a4
- Di e4 i4 4 i4i a e de c4 4d i e d a a i4 4	a i fai a4
- D bi i4i	a i fai a4
- Pa age ib e i4i a de i4 a a i4 4	a i fai a4
- V4 e i e i4i a	a i fai a4
R SISTANCE M CANIQUE	
- Ca aci de cha ge e abi i c e e d c4 - ec e 4 4e i i a i4 4 e ie de i i e4	NPD
- S abi i c e e d c4 ec e 4 4e i i a i4 4 i4 ie de i i e4	a i fai a4
NIVEAU SONORE	t 70 dB(A)
R SISTANCE	
- de a abi i c e e	a i fai a4
- de a e f4 a4ce de e age	a i fai a4
- de a i a4ce ca4i e	a i fai a4
SUBSTANCES DANGEREUSES	NPD

CE 0197

JUNG PUMPEN G bH - l4d ie . 4-6 33803 S ei4hage4, Ge a4

13

452.12.1509 - 453.12.1509

EN 12050-1:2001
Stazione di sollevamento per acque reflue contenenti materiale fecale

c4 i 108/2 ME (JP09347/5)
c4 i 108/2 M (JP09346/5)
c4 i 120/2 M (JP09877/5)
c4 i 300 E (JP09496/0)

c4 i 400 E (JP09770/5)
c4 i 400 (JP00637/9)
c4 i 400 E (JP09324/5)
c4 i 400 (JP09322/9)

c4 i 510/4 BW (JP09191/1)
c4 i 525/2 BW (JP09194/1)
c4 i 515/4 BW (JP09192/1)
c4 i 535/2 BW (JP09195/1)
c4 i 525/4 BW (JP09193/1)
c4 i 508/2 ME (JP43128/0)
c4 i 508/2 M (JP43129/0)
c4 i 520/2 M (JP43130/0)

c4 i 1010/4 BWE (JP09273/2)
c4 i 1025/2 BW (JP09461/1)
c4 i 1010/4 BW (JP09829/5)
c4 i 1035/2 BW (JP09462/1)
c4 i 1015/4 BW (JP09830/5)
c4 i 1008/2 ME (JP43131/0)
c4 i 1025/4 BW (JP09831/5)
c4 i 1008/2 M (JP43132/0)
c4 i 1020/2 M (JP43133/0)

c4 i 1210/4 BW (JP09168/2)
c4 i 1225/2 BW (JP09171/2)
c4 i 1215/4 BW (JP09169/2)
c4 i 1235/2 BW (JP09172/2)
c4 i 1225/4 BW (JP09170/2)

Racc4 a e 4 e a e4 4 a 4 a ic4 di ac e ef e i e di 4 a4 e feca i e di ac e ef e c44 e4e4 i 4 a4 e feca i a di 4 a de e di 4 di i ag44

INFIAMMABILITÀ	NPD
IMPERMEABILITÀ, ERMETICITÀ ALL ARIA	
- l e eabi	S e a a
- E e ic ag i 4d4 i	S e a a
EFFICACIA (CAPACITÀ DI SOLLEVAMENTO)	
- P4 aggi4 di a e ia i 4 idi	S e a a
- C4 ega e4 i a b4	S e a a
- Mi e i4i e de e i4ee di e4 i a i44e	S e a a
- Ve 4c di c4 i e4 4 i4i a	S e a a
- Pa aggi4 ibe 4 i4i 4 de i ia4 4	S e a a
- V4 e i e i4i 4	S e a a
RESISTENZA MECCANICA	
- Ca ac di ca ic4 e abi	NPD
acc4 a e 4 a di f 4 i deg i edifici	
- S abi a e de e ba 4i4 di acc4 a e 4 a i4 e 44 deg i edifici.	S e a a
SOGLIA DI RUMOROSITÀ	t 70 dB(A)
DUREVOLEZZA	
- de a abi a e	S e a a
- de a ca ac di 4 e a e4 4	S e a a
- de a e i e4 a ecca4ica	S e a a
SOSTANZE PERICOLOSE	NPD

CE 0197

JUNG PUMPEN G bH - l4d ie . 4-6 33803 S ei4hage4, Ge a4

13

452.12.1509 - 453.12.1509

EN 12050-1:2001
Spildevandsløfteanlæg

c4 i 108/2 ME (JP09347/5)
c4 i 108/2 M (JP09346/5)
c4 i 120/2 M (JP09877/5)
c4 i 300 E (JP09496/0)

c4 i 400 E (JP09770/5)
c4 i 400 (JP00637/9)
c4 i 400 E (JP09324/5)
c4 i 400 (JP09322/9)

c4 i 510/4 BW (JP09191/1)
c4 i 525/2 BW (JP09194/1)
c4 i 515/4 BW (JP09192/1)
c4 i 535/2 BW (JP09195/1)
c4 i 525/4 BW (JP09193/1)
c4 i 508/2 ME (JP43128/0)
c4 i 508/2 M (JP43129/0)
c4 i 520/2 M (JP43130/0)

c4 i 1010/4 BWE (JP09273/2)
c4 i 1025/2 BW (JP09461/1)
c4 i 1010/4 BW (JP09829/5)
c4 i 1035/2 BW (JP09462/1)
c4 i 1015/4 BW (JP09830/5)
c4 i 1008/2 ME (JP43131/0)
c4 i 1025/4 BW (JP09831/5)
c4 i 1008/2 M (JP43132/0)
c4 i 1020/2 M (JP43133/0)

c4 i 1210/4 BW (JP09168/2)
c4 i 1225/2 BW (JP09171/2)
c4 i 1215/4 BW (JP09169/2)
c4 i 1235/2 BW (JP09172/2)
c4 i 1225/4 BW (JP09170/2)

Sa i4g 4g a 4 a i k f 4i4g af i de a4d de4 f ka ie 4g i de a4d ed f ka ie e e e ea

BRANDADF RD	NPD
VANDT THED, LUFTT THED	
- Va4d hed	Be e
- L g hed	Be e
EFFEKTIVITET (IL FTEVIRKNING)	
- P 4i4g af fa e 4ffe	Be e
- R i 4i4ge	Be e
- Mi4. f4 e4 i a i44 ka4a e	Be e
- Mi4. f deha ighed	Be e
- A4 gge f ie i4i ge44e ga4g	Be e
- Mi4. 4 e4 e4	Be e
MEKANISK STYRKE	
- Sa ebeh4 de e4 b e4e 4g k e e abi e	NPD
i a4e4de e de4 f4 b g4i4ge	
- Sa ebeh4 de e4 b e4e 4g k e e abi e	Be e
i a4e4de e i b g4i4ge	
ST JNIVEAU	t 70 dB(A)
HOLDBARHED	
- k e abi e	Be e
- f e i k4i4g	Be e
- eka4i k ke	Be e
FARLIGE SUBSTANSER	NPD

CE 0197

JUNG PUMPEN G bH - l.4d ie . 4-6 33803 S ei.4hage.4, Ge a.4

13

452.12.1509 - 453.12.1509

EN 12050-1:2001
Fekalieuppfordringsanläggning

c.4 i 108/2 ME (JP09347/5)
c.4 i 108/2 M (JP09346/5)
c.4 i 120/2 M (JP09877/5)
c.4 i 300 E (JP09496/0)

c.4 i 400 E (JP09770/5)
c.4 i 400 (JP00637/9)
c.4 i 400 E (JP09324/5)
c.4 i 400 (JP09322/9)

c.4 i 510/4 BW (JP09191/1)
c.4 i 525/2 BW (JP09194/1)
c.4 i 515/4 BW (JP09192/1)
c.4 i 535/2 BW (JP09195/1)
c.4 i 525/4 BW (JP09193/1)
c.4 i 508/2 ME (JP43128/0)
c.4 i 508/2 M (JP43129/0)
c.4 i 520/2 M (JP43130/0)

c.4 i 1010/4 BWE (JP09273/2)
c.4 i 1025/2 BW (JP09461/1)
c.4 i 1010/4 BW (JP09829/5)
c.4 i 1035/2 BW (JP09462/1)
c.4 i 1015/4 BW (JP09830/5)
c.4 i 1008/2 ME (JP43131/0)
c.4 i 1025/4 BW (JP09831/5)
c.4 i 1008/2 M (JP43132/0)
c.4 i 1020/2 M (JP43133/0)

c.4 i 1210/4 BW (JP09168/2)
c.4 i 1225/2 BW (JP09171/2)
c.4 i 1215/4 BW (JP09169/2)
c.4 i 1235/2 BW (JP09172/2)
c.4 i 1225/4 BW (JP09170/2)

Sa i.4g .4ch a .4 a i k f.4 d i.4g a feka ief i a .4ch feka ieha ig a e.4 a i bakaf de .4 .4

BRAND	NPD
VATTENTÄTHET, LUFTTÄTHET	
- Va e.4 he	G.4dk .4d
- L k he	G.4dk .4d
VERKAN (UPPFORDRINGSVERKAN)	
- Ma .4i.4g fa a .4e.4	G.4dk .4d
- R a.4 .4i.4ga	G.4dk .4d
- L g a e.4 i a i.4.4 ed.4i.4ga	G.4dk .4d
- L g a f de ha ighe	G.4dk .4d
- F i g a ge.4.4 g .4g i a.4 gg.4i.4ge.4	G.4dk .4d
- L g a .4 .4	G.4dk .4d
MEKANISK H LLFASTHET	
- B f ga .4ch a i.4g beh a e.4 k e a a-bi i e f a .4d.4i.4g a.4f b gg.4ade	NPD
- Sa i.4g beh a e.4 k e a abi i e f a .4d-.4i.4g a.4f b gg.4ade	G.4dk .4d
BULLERNIV	t 70 dB(A)
H LLBARHET	
- De.4 k e a abi i e.4	G.4dk .4d
- f e ka.4	G.4dk .4d
- De.4 eka.4i ka h fa he e.4	G.4dk .4d
FARLIGA SUBSTANSER	NPD

CE 0197

JUNG PUMPEN G bH - l.4d ie . 4-6 33803 S ei.4hage.4, Ge a.4

13

452.12.1509 - 453.12.1509

EN 12050-1:2001
Käymäläjäteveden nostolaite

c.4 i 108/2 ME (JP09347/5)
c.4 i 108/2 M (JP09346/5)
c.4 i 120/2 M (JP09877/5)
c.4 i 300 E (JP09496/0)

c.4 i 400 E (JP09770/5)
c.4 i 400 (JP00637/9)
c.4 i 400 E (JP09324/5)
c.4 i 400 (JP09322/9)

c.4 i 510/4 BW (JP09191/1)
c.4 i 525/2 BW (JP09194/1)
c.4 i 515/4 BW (JP09192/1)
c.4 i 535/2 BW (JP09195/1)
c.4 i 525/4 BW (JP09193/1)
c.4 i 508/2 ME (JP43128/0)
c.4 i 508/2 M (JP43129/0)
c.4 i 520/2 M (JP43130/0)

c.4 i 1010/4 BWE (JP09273/2)
c.4 i 1025/2 BW (JP09461/1)
c.4 i 1010/4 BW (JP09829/5)
c.4 i 1035/2 BW (JP09462/1)
c.4 i 1015/4 BW (JP09830/5)
c.4 i 1008/2 ME (JP43131/0)
c.4 i 1025/4 BW (JP09831/5)
c.4 i 1008/2 M (JP43132/0)
c.4 i 1020/2 M (JP43133/0)

c.4 i 1210/4 BW (JP09168/2)
c.4 i 1225/2 BW (JP09171/2)
c.4 i 1215/4 BW (JP09169/2)
c.4 i 1235/2 BW (JP09172/2)
c.4 i 1225/4 BW (JP09170/2)

Ha aa.4 e.4 ja .4 e a i .4 e.4 ke i.4e.4 ja a .4-aa i.4e.4 .4.4 a i.4e.4 akai i.4 a a .4.4 .4 e a

KÄYTTÄYTYMINEN TULIPALOSSA	NPD
VESITIIVIYS, ILMATIIVIYS	
- Ve i	H k
- Haj i	H k
TEHO (NOSTOVAIKUTUS)	
- Kii.4 eide.4 ai.4eide.4 a	H k
- P ki i .4.4	H k
- I a j.4h .4je.4 hi i i a	H k
- V hi i a .4.4 e	H k
- Lai ei .4.4 a aa hi i i i	H k
- V hi i h i a	H k
MEKAANINEN KESTÄVYYS	
- Ke i i i .4 ka.4 a ja ake.4 ee i.4e.4 aka k -.4 ake.4.4 e.4 k .4 e a	NPD
- Ke i i i .4 ake.4 ee i.4e.4 aka k .4 ake.4-.4 e.4 i	H k
MELUTASO	t 70 dB(A)
KESTÄVYYS	
- Rake.4 ee i.4e.4 aka	H k
- N.4 .4 aik	H k
- Mekaa.4i.4e.4 j	H k
VAARALLISET AINEET	NPD

CE 0197

JUNG PUMPEN G bH - l4d ie . 4-6 33803 S ei4hage4, Ge a4

13

452.12.1509 - 453.12.1509

EN 12050-1:2001
Instalacja przepompowni fekaliów

c4 i 108/2 ME (JP09347/5)
c4 i 120/2 M (JP09877/5)
c4 i 300 E (JP09496/0)

c4 i 400 E (JP09770/5)
c4 i 400 E (JP09324/5)

c4 i 510/4 BW (JP09191/1)
c4 i 515/4 BW (JP09192/1)
c4 i 525/4 BW (JP09193/1)
c4 i 508/2 M (JP43129/0)

c4 i 1010/4 BWE (JP09273/2)
c4 i 1010/4 BW (JP09829/5)
c4 i 1015/4 BW (JP09830/5)
c4 i 1025/4 BW (JP09831/5)

c4 i 108/2 M (JP09346/5)

c4 i 400 (JP00637/9)
c4 i 400 (JP09322/9)

c4 i 525/2 BW (JP09194/1)
c4 i 535/2 BW (JP09195/1)
c4 i 508/2 ME (JP43128/0)
c4 i 520/2 M (JP43130/0)

c4 i 1025/2 BW (JP09461/1)
c4 i 1035/2 BW (JP09462/1)
c4 i 1008/2 ME (JP43131/0)
c4 i 1008/2 M (JP43132/0)

CE 0197

JUNG PUMPEN G bH - l4d ie . 4-6 33803 S ei4hage4, Ge a4

13

452.12.1509 - 453.12.1509

EN 12050-1:2001
Čerpacie stanice odpadových vôd s obsahom fekálnych splaškov

c4 i 108/2 ME (JP09347/5)
c4 i 108/2 M (JP09346/5)
c4 i 120/2 M (JP09877/5)
c4 i 300 E (JP09496/0)

c4 i 400 E (JP09770/5)
c4 i 400 (JP00637/9)
c4 i 400 E (JP09324/5)
c4 i 400 (JP09322/9)

c4 i 510/4 BW (JP09191/1)
c4 i 525/2 BW (JP09194/1)
c4 i 515/4 BW (JP09192/1)
c4 i 535/2 BW (JP09195/1)
c4 i 525/4 BW (JP09193/1)
c4 i 508/2 ME (JP43128/0)
c4 i 508/2 M (JP43129/0)
c4 i 520/2 M (JP43130/0)

c4 i 1010/4 BWE (JP09273/2)
c4 i 1025/2 BW (JP09461/1)
c4 i 1010/4 BW (JP09829/5)
c4 i 1035/2 BW (JP09462/1)
c4 i 1015/4 BW (JP09830/5)
c4 i 1008/2 ME (JP43131/0)
c4 i 1025/4 BW (JP09831/5)
c4 i 1008/2 M (JP43132/0)
c4 i 1020/2 M (JP43133/0)

c4 i 1210/4 BW (JP09168/2)
c4 i 1225/2 BW (JP09171/2)
c4 i 1215/4 BW (JP09169/2)
c4 i 1235/2 BW (JP09172/2)
c4 i 1225/4 BW (JP09170/2)

Zbe a a 4 a ick ° e a4ie 4d ad ch d be fek 4 ch a 4d ad ch d 4b ah4 fek 4 ch a k a 4 ed4 c 4 4e d ia

REAKCIA PO AS PO IARU	NPD
VODOTESNOS , VZDUCHOTESNOS	
- d4e 4 4	iadk
- ach be e 4 4	iadk
INNOS (INOK SANIA)	
- d a a e4 ch ° a c	iadk
- b4 4 jk	iadk
- i4i 4e 4 e e ac ch ede4	iadk
- i4i 4a ch 4 ie 4k	iadk
- 4 4 i4i 4 iech4d	iadk
- i4i 4 k 4 4bje	iadk
MECHANICK PEVNOS	
- 4 4 4 a k 4a abi a be 4ej 4 d4b e 4 a4ie i 4 b d	NPD
- k 4a abi a be 4ej 4 d4b e 4 a4ie ci b d	iadk
HLADINA HLUKU	70 dB (A)
TRVANLIVOS	
- k 4ej abi	iadk
- ed aj ch ° i4k	iadk
- echa4ickej e 44 i	iadk
NEBEZPE N L TKY	NPD

CE 0197

JUNG PUMPEN G bH - l4d ie . 4-6 33803 S ei4hage4, Ge a4

13

452.12.1509 - 453.12.1509

EN 12050-1:2001
Fekáliatartalmú szennyvizek átemelői

c4 i 108/2 ME (JP09347/5)
c4 i 108/2 M (JP09346/5)
c4 i 120/2 M (JP09877/5)
c4 i 300 E (JP09496/0)

c4 i 400 E (JP09770/5)
c4 i 400 (JP00637/9)
c4 i 400 E (JP09324/5)
c4 i 400 (JP09322/9)

c4 i 510/4 BW (JP09191/1)
c4 i 525/2 BW (JP09194/1)
c4 i 515/4 BW (JP09192/1)
c4 i 535/2 BW (JP09195/1)
c4 i 525/4 BW (JP09193/1)
c4 i 508/2 ME (JP43128/0)
c4 i 508/2 M (JP43129/0)
c4 i 520/2 M (JP43130/0)

c4 i 1010/4 BWE (JP09273/2)
c4 i 1025/2 BW (JP09461/1)
c4 i 1010/4 BW (JP09829/5)
c4 i 1035/2 BW (JP09462/1)
c4 i 1015/4 BW (JP09830/5)
c4 i 1008/2 ME (JP43131/0)
c4 i 1025/4 BW (JP09831/5)
c4 i 1008/2 M (JP43132/0)
c4 i 1020/2 M (JP43133/0)

c4 i 1210/4 BW (JP09168/2)
c4 i 1225/2 BW (JP09171/2)
c4 i 1215/4 BW (JP09169/2)
c4 i 1235/2 BW (JP09172/2)
c4 i 1225/4 BW (JP09170/2)

Fek ia e4 e e44 fek ia a a e44 g j e e- e á a 4 d i i4 fe e

VISELKED S T Z ESET N	NPD
V Z LL S G, L° G TERESZT S	
- V g	Megfe e
- S ag e4 e g	Megfe e
HAT KONYS G (EMEL HAT S)	
- S i d a4 ag4k a	Megfe e
- C c a ak4 4k	Megfe e
- A e e e kek i4i i e ei	Megfe e
- A a i4i i ebe ge	Megfe e
- A be e4de abad, i4i i e e e	Megfe e
- Mi4i i ha 44 4 e4	Megfe e
MECHANIKAI SZIL RDS G	
- A g j a a e he he ge k i abi - a e e eke4 k i ha 4 a h4	NPD
- A g j a k i abi a e e eke4 be i ha 4 a h4	Megfe e
ZAJSZINT	70 dB(A)
TART SS G	
- a k i abi a a ga	Megfe e
- a e e ha a a ga	Megfe e
- a echa4ikai i d g a a ga	Megfe e
VESZ LYES ANYAGOK	NPD

CE 0197

JUNG PUMPEN G bH - l4d ie . 4-6 33803 S ei4hage4, Ge a4

13

452.12.1509 - 453.12.1509

EN 12050-1:2001
Stație de pompare ape uzate cu materii fecale

c4 i 108/2 ME (JP09347/5)	c4 i 108/2 M (JP09346/5)
c4 i 120/2 M (JP09877/5)	
c4 i 300 E (JP09496/0)	
c4 i 400 E (JP09770/5)	c4 i 400 (JP00637/9)
c4 i 400 E (JP09324/5)	c4 i 400 (JP09322/9)
c4 i 510/4 BW (JP09191/1)	c4 i 525/2 BW (JP09194/1)
c4 i 515/4 BW (JP09192/1)	c4 i 535/2 BW (JP09195/1)
c4 i 525/4 BW (JP09193/1)	c4 i 508/2 ME (JP43128/0)
c4 i 508/2 M (JP43129/0)	c4 i 520/2 M (JP43130/0)
c4 i 1010/4 BWE (JP09273/2)	c4 i 1025/2 BW (JP09461/1)
c4 i 1010/4 BW (JP09829/5)	c4 i 1035/2 BW (JP09462/1)
c4 i 1015/4 BW (JP09830/5)	c4 i 1008/2 ME (JP43131/0)
c4 i 1025/4 BW (JP09831/5)	c4 i 1008/2 M (JP43132/0)
c4 i 1020/2 M (JP43133/0)	
c4 i 1210/4 BW (JP09168/2)	c4 i 1225/2 BW (JP09171/2)
c4 i 1215/4 BW (JP09169/2)	c4 i 1235/2 BW (JP09172/2)
c4 i 1225/4 BW (JP09170/2)	

C4 ec a ea Fi 4 a ea a 4 a de a e a e f a e ii feca e Fi a e a e c a e ii feca e dea a 4 e i a i 4 ibi a a e 4 a e di4 i e de ca4a i a e

COMPORTAMENTUL ÎN CAZ DE INCENDIU	NPD
IMPERMEABILITATE LA AP , ETAN EITATE LA AER	
- l e eabi i a e a a	Re Fi
- E a4Fei a e a i 4 i	Re Fi
EFICACITATE (EFICIEN , DE POMPARE)	
- T a4 4 de a e ia e 4 ide	Re Fi
- Rac4 d i ea	Re Fi
- Di e4 i 4i i4i e a e c44d c e 4 de e4 i a e	Re Fi
- Vi e a de c ge e i4i	Re Fi
- T ece ea i4i ibe a i4 a a iei	Re Fi
- Ca aci a e i i abi i4i	Re Fi
REZISTEN A MECANIC	
- Ca aci a ea 4 a4 Fi abi i a ea c a a e e - i4 i c4 ec 4 e4 i a ea 4 afa a c di i 4	NPD
- S abi i a ea c a a e e i4 i c4 ec 4 e4 i a ea 4 i4 e i4 c di i 4	Re Fi
NIVEL DE ZGOMOT	t 70 dB(A)
DURABILITATEA	
- S abi i a ea c a	Re Fi
- Eficie4 de 4 a e	Re Fi
- Re i e4 a eca4ic	Re Fi
SUBSTAN E PERICULOASE	NPD

PENTAIR **JUNG PUMPEN**

EU-Konformitätserklärung
EU-Prohlášeni o shodě
EU-Overensstemmelseserklæring
EU-Declaration of Conformity
EU-Vaatimustenmukaisuusvakuutus
EU-Déclaration de Conformité
EU-Megfelelőségi nyilatkozat
EU-Dichiarazione di conformità
EU-Conformiteitsverklaring
EU-Deklaracja zgodności
EU-Declarație de conformitate
EU-Vyhlásenie o zhode
EU-Försäkran om överensstämmelse

DE · Richtlinien - Harmonisierte Normen
CS · Směrnice - Harmonizované normy
DA · Direktiv - Harmoniseret standard
EN · Directives - Harmonised standards
FI · Direktiivi - Yhdenmukaistettu standardi
FR · Directives - Normes harmonisées
HU · Irányelve - Harmonizá szabványok
IT · Direttive - Norme armonizzate
NL · Richtlijnen - Geharmoniseerde normen
PL · Dyrektywy - Normy zharmonizowane
RO · Directivă - Norme coroborate
SK · Smernice - Harmonizované normy
SV · Direktiv - Harmoniserade normer

• **2006/42/EG**	(MD)	**EN 809:1998/AC:2010, EN ISO 12100:2010, EN 60335-1:2012/AC:2014**
• **2011/65/EU**	(RoHS)	
• **2014/30/EU**	(EMC)	**EN 55014-1:2006/A2:2011, EN 55014-2:1997/A2:2008, EN 61000-3-2:2014, EN 61000-3-3:2013**
• **2014/34/EU**	(ATEX)	**EN 1127-1:2011**

JUNG PUMPEN GmbH - Industriestr. 4-6 - 33803 Steinhagen - Germany - www.jung-pumpen.de

DE · Wir erklären in alleiniger Verantwortung, dass das Produkt den aufgeführten Richtlinien entspricht.
CS · Prohlašujeme na svou výlučnou odpovědnost, že výrobek odpovídá jmenovaným směrnicím.
DA · Vi erklærer under ansvar at produktet i overensstemmelse med de retningslinjer
EN · We hereby declare, under our sole responsibility, that the product is in accordance with the specified Directives.
FI · Me vakuutamme omalla vastuullamme, että tuote täyttää ohjeita.
FR · Nous déclarons sous notre propre responsabilité que le produit répond aux directives.
HU · Kizárólagos felelősségünk tudatában kijelentjük, hogy ez a termék megfelel az Európai Unió fentnevezett irányelveinek.
IT · Noi dichiariamo sotto la nostra esclusiva responsabilità che il prodotto è conforme alle direttive citate
NL · Wij verklaren geheel onder eigen verantwoordelijkheid dat het product voldoet aan de gestelde richtlijnen.
PL · Z pełną odpowiedzialnością oświadczamy, że produkt odpowiada postanowieniom wymienionych dyrektyw.
RO · Declarăm pe proprie răspundere că produsul corespunde normelor prevăzute de directivele mai sus menționate.
SK · Na výlučnú zodpovednosť vyhlasujeme, že výrobok spíňa požiadavky uvedených smerníc.
SV · Vi försäkrar att produkten på vårt ansvar är utförd enligt gällande riktlinjer.

compli 300 E (JP09496/0)

compli 400 E (JP09770/5)
compli 400 E (JP09324/5)
compli 400 (JP00637/9)
compli 400 (JP09322/9)

compli 510/4 BW (JP09191/1)
compli 515/4 BW (JP09192/1)
compli 525/4 BW (JP09193/1)
compli 525/2 BW (JP09194/1)
compli 535/2 BW (JP09195/1)

compli 108/2 ME (JP09347/5)
compli 108/2 M (JP09346/5)
compli 120/2 M (JP09877/5)
compli 508/2 ME (JP43128/0)
compli 508/2 M (JP43129/0)
compli 520/2 M (JP43130/0)

DE · Weitere normative Dokumente CS · Jinými normativními dokumenty DA · Andre normative dokumenter EN · Other normative documents FI · Muiden normien FR · Autres documents normatifs HU · Egyéb szabályozó dokumentumokban leírtaknak IT · Altri documenti normativi NL · Verdere normatieve documenten PL · Innymi dokumentami normatywnymi RO · Alte acte normative SV · Vidare normerande dokument SK · Iným záväzným dokumentom:

EN 50274:2002/AC:2009,
EN 60335-2-41:2003/A2:2010,
TRBS 2153, CLC/TR 50404

DE · Bevollmächtigter für technische Dokumentation CS · Oprávněná osoba pro technickou dokumentaci DA · Autoriseret person for teknisk dokumentation EN · Authorized person for technical documentation FI · Valtuutettu henkilö tekninen dokumentaatio FR · Personne autorisée à la documentation technique HU · Hivatalos személy műszaki dokumentáció IT · Persona abilitata per la documentazione tecnica NL · Bevoegd persoon voor technische documentatie PL · Pełnomocnik ds. dokumentacji technicznej RO · Persoană autorizată pentru documentatiei tehnice SV · Auktoriserad person för teknisk dokumentation SK · Oprávnená osoba pre technickú dokumentáciu:

JUNG PUMPEN - Stefan Sirges - Industriestr. 4-6 - 33803 Steinhagen

Steinhagen, 10-01-2017

Stefan Sirges, General Manager

i.V.
Rüdiger Rokohl, Sales Manager

CE 352-13-1701

PENTAIR **JUNG PUMPEN**

EU-Konformitätserklärung
EU-Prohlášeni o shodě
EU-Overensstemmelseserklæring
EU-Declaration of Conformity
EU-Vaatimustenmukaisuusvakuutus
EU-Déclaration de Conformité
EU-Megfelelőségi nyilatkozat
EU-Dichiarazione di conformità
EU-Conformiteitsverklaring
EU-Deklaracja zgodności
EU-Declarație de conformitate
EU-Vyhlásenie o zhode
EU-Försäkran om överensstämmelse

DE · Richtlinien - Harmonisierte Normen
CS · Směrnice - Harmonizované normy
DA · Direktiv - Harmoniseret standard
EN · Directives - Harmonised standards
FI · Direktiivi - Yhdenmukaistettu standardi
FR · Directives - Normes harmonisées
HU · Irányelve - Harmonizá szabványok
IT · Direttive - Norme armonizzate
NL · Richtlijnen - Geharmoniseerde normen
PL · Dyrektywy - Normy zharmonizowane
RO · Directivă - Norme coroborate
SK · Smernice - Harmonizované normy
SV · Direktiv - Harmoniserade normer

• **2006/42/EG**	(MD)	**EN 809:1998/AC:2010, EN ISO 12100:2010, EN 60335-1:2012/AC:2014**
• **2011/65/EU**	(RoHS)	
• **2014/30/EU**	(EMC)	**EN 55014-1:2006/A2:2011, EN 55014-2:1997/A2:2008, EN 61000-3-2:2014, EN 61000-3-3:2013**
• **2014/34/EU**	(ATEX)	**EN 1127-1:2011**

JUNG PUMPEN GmbH - Industriestr. 4-6 - 33803 Steinhagen - Germany - www.jung-pumpen.de

DE · Wir erklären in alleiniger Verantwortung, dass das Produkt den aufgeführten Richtlinien entspricht.
CS · Prohlašujeme na svou výlučnou odpovědnost, že výrobek odpovídá jmenovaným směrnicím.
DA · Vi erklærer under ansvar at produktet i overensstemmelse med de retningslinjer
EN · We hereby declare, under our sole responsibility, that the product is in accordance with the specified Directives.
FI · Me vakuutamme omalla vastuullamme, että tuote täyttää ohjeita.
FR · Nous déclarons sous notre propre responsabilité que le produit répond aux directives.
HU · Kizárólagos felelősségünk tudatában kijelentjük, hogy ez a termék megfelel az Európai Unió fentnevezett irányelveinek.
IT · Noi dichiariamo sotto la nostra esclusiva responsabilità che il prodotto è conforme alle direttive citate
NL · Wij verklaren geheel onder eigen verantwoordelijkheid dat het product voldoet aan de gestelde richtlijnen.
PL · Z pełną odpowiedzialnością oświadczamy, że produkt odpowiada postanowieniom wymienionych dyrektyw.
RO · Declarăm pe proprie răspundere că produsul corespunde normelor prevăzute de directivele mai sus menționate.
SK · Na výlučnú zodpovednosť vyhlasujeme, že výrobok spíňa požiadavky uvedených smerníc.
SV · Vi försäkrar att produkten på vårt ansvar är utförd enligt gällande riktlinjer.

compli 1010/4 BWE (JP09273/2)
compli 1010/4 BW (JP09829/5)
compli 1015/4 BW (JP09830/5)
compli 1025/4 BW (JP09831/5)
compli 1025/2 BW (JP09461/1)
compli 1035/2 BW (JP09462/1)
compli 1008/2 ME (JP43131)
compli 1008/2 M (JP43132)
compli 1020/2 M (JP43133)
compli 1210/4 BW (JP09168/2)
compli 1215/4 BW (JP09169/2)
compli 1225/4 BW (JP09170/2)
compli 1225/2 BW (JP09171/2)
compli 1235/2 BW (JP09172/2)
compli 1525/4 C1 (JP09181/1)
compli 1535/4 C1 (JP09182/1)
compli 1555/4 C5 (JP09183/1)
compli 1575/4 C5 (JP09184/1)
compli 1575/4 B6 (JP09185/1)
compli 1535/2 B2 (JP45933)
compli 1555/2 B2 (JP45934)
compli 1575/2 B5 (JP45141/1)
compli 15100/2 B5 (JP45142/1)
compli 15200/2 B6 (JP45935)
compli 2525/4 C1 (JP09186/1)
compli 2535/4 C1 (JP09187/1)
compli 2555/4 C5 (JP09188/1)
compli 2575/4 C5 (JP09189/1)
compli 2575/4 B6 (JP09190/1)
compli 2535/2 B2 (JP45936)
compli 2555/2 B2 (JP45937)
compli 2575/2 B5 (JP45938)
compli 25100/2 B5 (JP45939)
compli 25200/2 B6 (JP45940)

DE · Weitere normative Dokumente CS · Jinými normativními dokumenty DA · Andre normative dokumenter EN · Other normative documents FI · Muiden normien FR · Autres documents normatifs HU · Egyéb szabályozó dokumentumokban leírtaknak IT · Altri documenti normativi NL · Verdere normatieve documenten PL · Innymi dokumentami normatywnymi RO · Alte acte normative SV · Vidare normerande dokument SK · Iným záväzným dokumentom:

EN 50274:2002/AC:2009,
EN 60335-2-41:2003/A2:2010,
TRBS 2153, CLC/TR 50404

DE · Bevollmächtigter für technische Dokumentation CS · Oprávněná osoba pro technickou dokumentaci DA · Autoriseret person for teknisk dokumentation EN · Authorized person for technical documentation FI · Valtuutettu henkilö tekninen dokumentaatio FR · Personne autorisée à la documentation technique HU · Hivatalos személy műszaki dokumentáció IT · Persona abilitata per la documentazione tecnica NL · Bevoegd persoon voor technische documentatie PL · Pełnomocnik ds. dokumentacji technicznej RO · Persoană autorizată pentru documentatiei tehnice SV · Auktoriserad person för teknisk dokumentation SK · Oprávnená osoba pre technickú dokumentáciu:

JUNG PUMPEN - Stefan Sirges - Industriestr. 4-6 - 33803 Steinhagen

Steinhagen, 10-01-2017

Stefan Sirges, General Manager

i.V. Rüdiger Rokohl, Sales Manager

CE 353-14-1701

JUNG PUMPEN G bH - l.4d ie . 4-6 - 33803 S ei.4hage.4 - De ch a.4d
Te . +49 5204 170 - Fa +49 5204 80368 - eMai kd@j .4g e.4.de

PENTAIR WATER ITALY S - Via Ma acci4, 13 - 56010 L g.4a.44 - Pi a - La ia
Te . +39 050 716 111 - Fa +39 050 716 801 - eMai : i.4f4@j .4g e.4.i

PENTAIR WATER POLSKA S . .4.4. - . P .44 21 - 41-200 S4 .44 iec - P4 ka
Te . +48 32 295 1200 - Fa +48 32 295 1201 i.4f4 .j .4g e.4@ e.4 ai .c4